lindab | we simplify construction

Lindab **Residential Heat Recovery**

RHR-CF

Installation guide

Installation instructions RHR-CF

1. Contents

Installation instructions RHR-CF

2. Safety

2.1 Symbols

Carefully read this booklet before starting up the machine.

Attention! Carefully turn off the electrical supply before removing protection.

Attention! Risk of injury/ material damage/ damage to appliance.

Operations which may be carried out by the user

Repairs to be carried out exclusively by an installer or authorised technician.

Always wear work gloves.

2.2 Essential safety rules

It is dangerous to touch the appliance when wet or with bare feet.

Do not perform any type of intervention or maintenance without first having disconnected power to the appliance.

Do not tamper with or modify the adjustment or safety devices unless authorised or without instructions.

Do not twist, detach or pull the power cords coming out of the appliance even when not plugged in.

Do not pour or spray water on the appliance.

Never insert anything through the filter seat holes.

Do not remove any protection without first having disconnected power to the appliance.

Do not throw or leave any residual packing material within the reach of children as it is a potential risk of danger.

Do not install the appliance in explosive or corrosive atmospheres, in moist areas, outdoors or in extremely dusty environments.

2.3 Safety requirements

The appliance cannot be used by children or by people with reduced capabilities, or lack of necessary experience and knowledge without supervision or having received instructions regarding safe use of the appliance and understanding the hazards related to it.

Children must not play with the appliance.

The cleaning and maintenance to be carried out by the user cannot be done by children without supervision.

Before performing any operation, make sure to:

1. Disconnect electric power to the appliance.
2. Close the water supply valve of the coil and let it cool off (pre-and post-heating coils if installed as accessories).
3. Install a circuit breaker switch in an easily accessible position near the appliance or appliances.

RISK OF INJURY!

For safety purposes, during installation, maintenance and repairs, abide by the following:

- Always wear work gloves.
- Do not expose to flammable gases.

RISK OF INJURY/ MATERIAL DAMAGE/ DAMAGE TO APPLIANCE!

The appliance is very heavy.

Lifting it can cause injuries.

Have another person help you lift it in order to carry the machine.

Lift it slowly and pay attention that it does not fall.

The fans can reach a speed of 3000 rpm.

Do not insert objects or your hands into the electric fan.

Do not remove the safety labels inside the appliance. If illegible, have them replaced.

Make sure to earth the appliance.

Always request original spare parts when replacing components.

The installation site must be chosen so that there is sufficient space for the connections of the air pipes and to allow maintenance to be carried out conveniently.

Make sure there is at least 1 m of open space in front of the appliance to allow for maintenance operations.

If the appliance is hung on a wall, make sure the wall has a superficial mass of at least 200 kg/m2. Otherwise use a stand to install it on the floor (optional accessory sold separately).

Do not install the appliance near bedrooms.

To improve environmental comfort, install silencers on the ambient air input and return piping.

The appliances cannot be installed in environments cooler than < 12°C.

The residential ventilation systems are designed for constant operation to avoid the formation of condensation and mould in the environments. The units can only be switched off for scheduled maintenance.

The appliances cannot be used to dry structures and masonry of new homes.

ATTENTION! It is strictly forbidden to operate the unit before having connected the 4 air ducts to the ducting system.

Installation instructions RHR-CF

3. Manual

3.1 Use and storage of the manual

This instruction manual is intended for the machine user, owner and technical installer and must always be available for consultation.

The instruction manual indicates the intended use of the machine, its technical features and provides indications as to its correct use, cleaning and adjustments.

It also provides important indications for maintenance, for residual risks and to carry out operations carefully.

This manual must be considered as a part of the machine

and must be **KEPT FOR FUTURE REFERENCE** until the final scrapping of the machine.

The instruction manual must always be available for consultation and preserved in a dry and protected area.

Should it be lost or damaged, the user can request a new manual from the manufacturer or retailer, indicating the model and serial number of the machine shown on its rating plate.

This manual reflects the state of technology at the time it was drafted. The manufacturer reserves the right to update production and following manuals without being obliged to update previous versions.

The manufacturer will not be held liable in cases of:

- improper use or misuse of the machine
- use nonconforming to that expressly specified in this publication
- serious shortcomings in intended and recommended maintenance
- changes to the machine or any unauthorised intervention
- use of non-original spare parts or not specific for the model
- total or partial failure to comply with the instructions
- exceptional events

3.2 Scope

BEFORE INSTALLING THE APPLIANCE READ THIS MANUAL CAREFULLY

Residential ventilation appliances convey outdoor air through the cross-flow heat exchanger and distribute it to the different rooms by means of a duct distribution system.

Moist and stale air is suctioned and then, again passing through the cross-flow heat exchanger, is exhausted to the outside of the appliance by residential ventilation.

3.3 Machine identification

There is an identification label on each appliance bearing the data of the manufacturer and the machine type (See Figure “1”).

Fig.1.

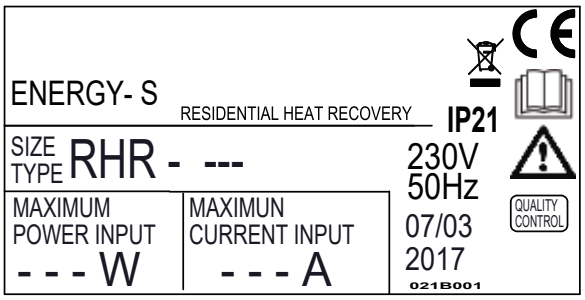

4. End of use

4.1 Waste disposal

Consumables and replaced parts should be disposed of safely and in accordance with the environmental protection legislation.

Installation instructions RHR-CF

5. Range

Model	Version Equipment	Side Acoustic Insulation	Integrated Modulating Electric Resistance	Flow Configuration	Integrated Humidity Sensor	Integrated Automatic Flow Rate Control	Energy Class	Electric Resistance Power (W)
RHR-CF-V 170	STANDARD	-	-	Default LH Reversible	*	**	A	-
RHR-CF-V 270	STANDARD	-	-	Default LH Reversible	*	**	A	-
RHR-CF-V 360	STANDARD	-	-	Default LH Reversible	*	**	A	-
RHR-CF-V 460	STANDARD	X	-	Default LH Reversible	*	**	A	-
RHR-CF-V 600	STANDARD	X		Default LH Reversible	*	**	A	-
RHR-CF-V 170 EL	STANDARD	-	X	LH	*	**	A	500
RHR-CF-V 270 EL	STANDARD	-	X	LH	*	**	A	900
RHR-CF-V 360 EL	STANDARD	-	X	LH	*	**	A	1250
RHR-CF-V 460 EL	STANDARD	X	X	LH	*	**	A	1600
RHR-CF-V 600 EL	STANDARD	X	X	LH	*	**	A	2000
RHR-CF-V 170 ER	STANDARD	-	X	RH	*	**	A	500
RHR-CF-V 270 ER	STANDARD	-	X	RH	*	**	A	900
RHR-CF-V 360 ER	STANDARD	-	X	RH	*	**	A	1250
RHR-CF-V 460 ER	STANDARD	X	X	RH	*	**	A	1600
RHR-CF-V 600 ER	STANDARD	X	X	DX	*	**	A	2000
RHR-CF-V 180 PRO RHR-CF-V 180 PRO M ***	PRO	X	-	Default LH Reversible	X	X	A+	-
RHR-CF-V 280 PRO RHR-CF-V 280 PRO M ***	PRO	X	-	Default LH Reversible	X	X	A+	-
RHR-CF-V 370 PRO RHR-CF-V 370 PRO M ***	PRO	X	-	Default LH Reversible	X	X	A+	-
RHR-CF-V 460 PRO RHR-CF-V 460 PRO M ***	PRO	X	-	Default LH Reversible	X	X	A	-
RHR-CF-V 600 PRO RHR-CF-V 600 PRO M ***	PRO	X	-	Default SX Reversible	X	X	A	-
RHR-CF-V 180 PRO EL RHR-CF-V 180 PRO ELM ***	PRO	X	X	LH	X	X	A+	500
RHR-CF-V 280 PRO EL RHR-CF-V 280 PRO ELM ***	PRO	X	X	LH	X	X	A+	900
RHR-CF-V 370 PRO EL RHR-CF-V 370 PRO ELM***	PRO	X	X	LH	X	X	A+	1250
RHR-CF-V 460 PRO EL RHR-CF-V 460 PRO ELM ***	PRO	X	X	LH	X	X	A	1600
RHR-CF-V 600 PRO EL RHR-CF-V 600 PRO ELM ***	PRO	X	X	SX	X	X	A	2000

* Humidity sensor available as an accessory
** Pressure transducer for automatic control of flow rates available as an accessory
*** Models fitted with enthalpy heat exchangers

Installation instructions RHR-CF

5. Range

Model	Version Equip-ment	Side Acoustic Insulation	Integrated Modulating Electric Resistance	Flow Configuration	Integrated Humidity Sensor	Integrated Automatic Flow Rate Control	Energy Class	Electric Resistance Power (W)
RHR-CF-V 180 PRO ER RHR-CF-V 180 PRO ERM***	PRO	X	X	RH	X	X	A+	500
RHR-CF-V 280 PRO ER RHR-CF-V 280 PRO ERM ***	PRO	X	X	RH	X	X	A+	900
RHR-CF-V 370 PRO ER RHR-CF-V 370 PRO ERM ***	PRO	X	X	RH	X	X	A+	1250
RHR-CF-V 460 PRO ER RHR-CF-V 460 PRO ERM ***	PRO	X	X	RH	X	X	A	1600
RHR-CF-V 600 PRO ER RHR-CF-V 600 PRO ERM ***	PRO	X	X	DX	X	X	A	2000

* Humidity sensor available as an accessory
** Pressure transducer for automatic control of flow rates available as an accessory
*** Models fitted with enthalpy heat exchangers

Installation instructions RHR-CF

6. Dimensions

Fig. 2

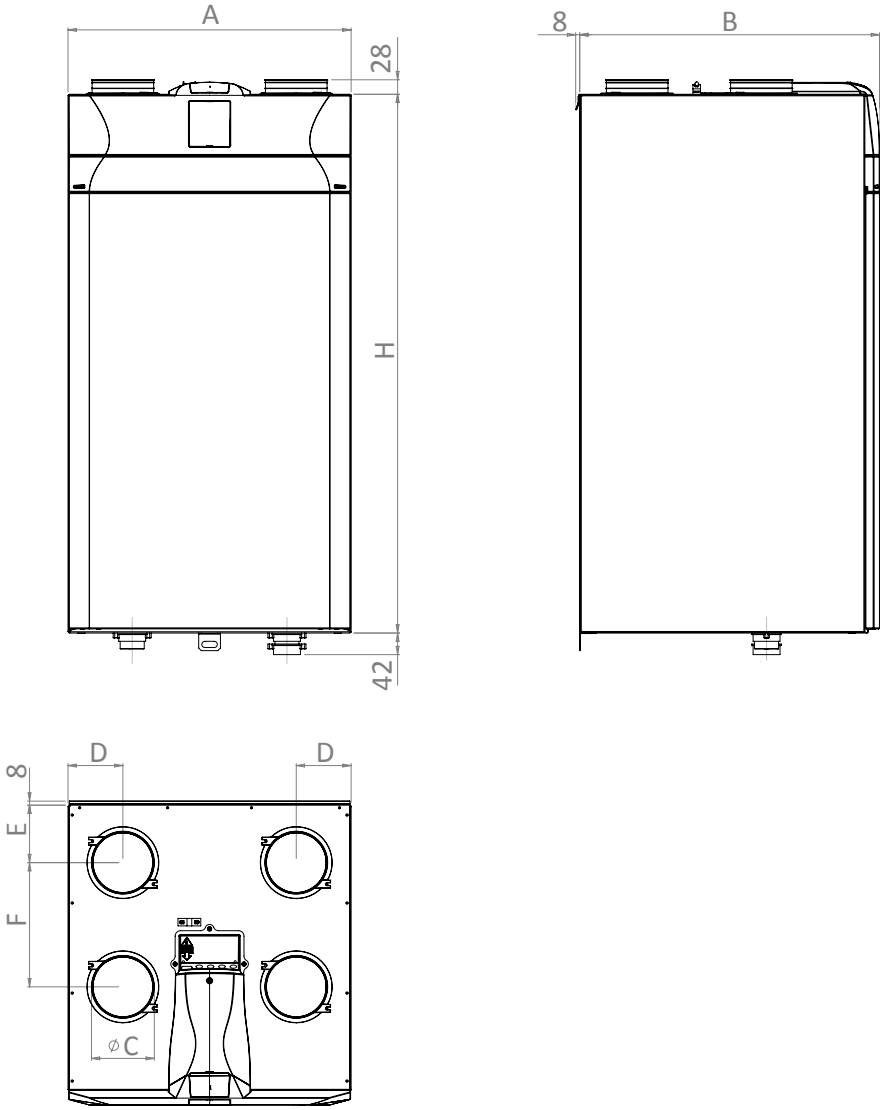

Model	A (mm)	B (mm)	Ø C (mm)	D (mm)	E (mm)	F (mm)	H (mm)
RHR-CF-V 170	547	505	125	106	93.5	212.5	1041
RHR-CF-V 270	547	580	160	106	111	240	1041
RHR-CF-V 360	547	630	160	106	111	290	1041

Installation instructions RHR-CF

6. Dimensions

Fig. 3

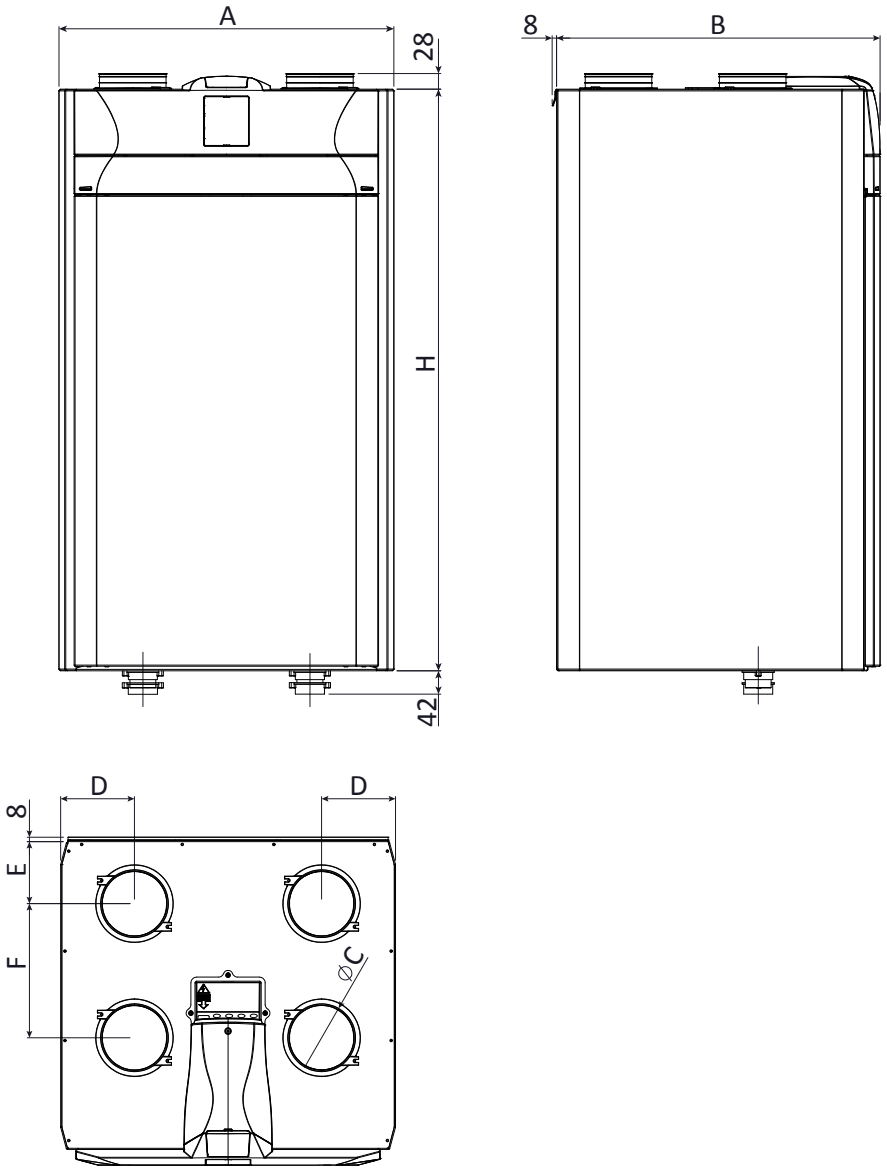

Model		A (mm)	B (mm)	Ø C (mm)	D (mm)	E (mm)	F (mm)	H (mm)
Heat Exchangers Standard	Enthalpy Heat Exchangers							
RHR-CF-V 180 PRO	RHR-CF-V 180 PROM	600	580	125	132	111	240	1041
RHR-CF-V 280 PRO	RHR-CF-V 280 PROM	600	630	160	132	111	290	1041
RHR-CF-V 370 PRO	RHR-CF-V 370 PROM	660	680	160	147	126	305	980
RHR-CF-V 460 PRO	RHR-CF-V 460 PROM	660	680	180	147	126	305	980
RHR-CF-V 460	-	660	680	180	147	126	305	980
RHR-CF-V 600 PRO	RHR-CF-V 600 PROM	660	680	180	147	126	305	980
RHR-CF-V 600	-	660	680	180	147	126	305	980

Installation instructions RHR-CF

6.1 Machine dimensions with packaging

Fig. 4

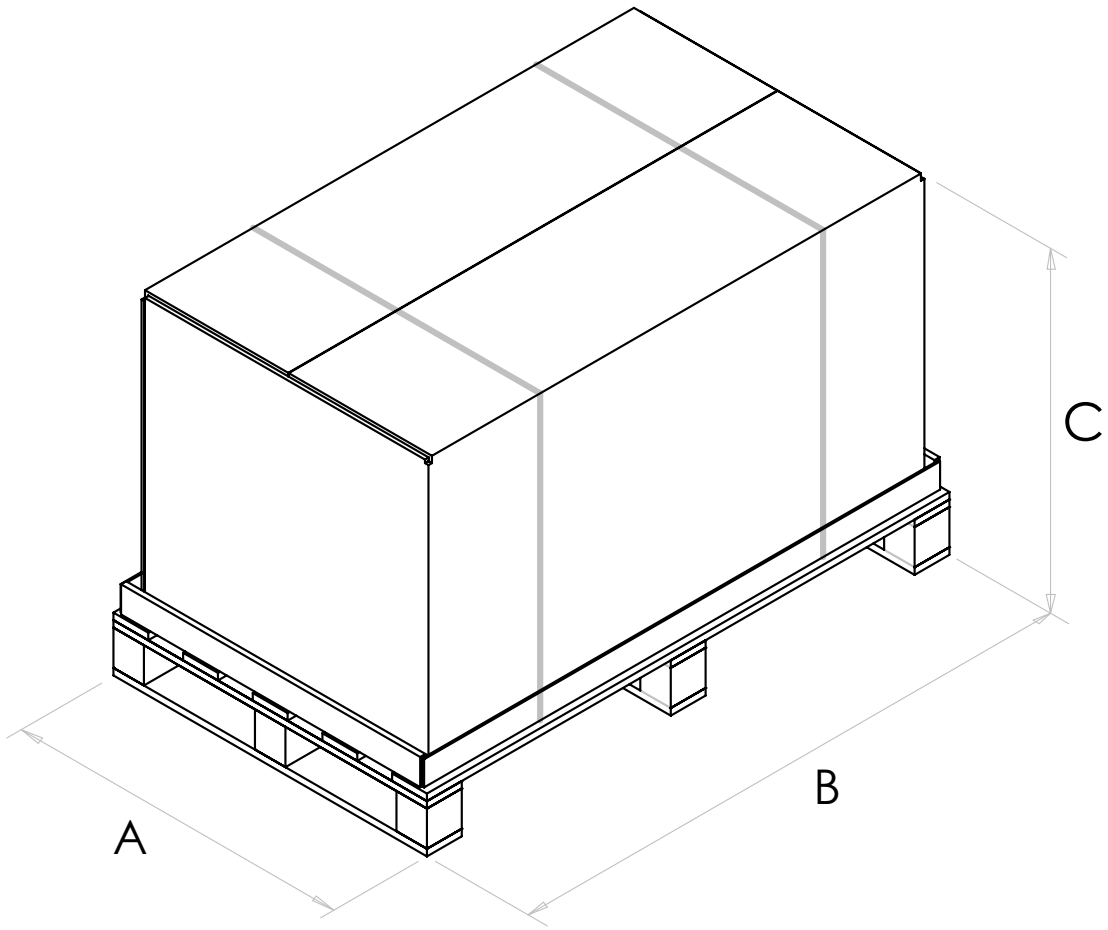

Model		A (mm)	B (mm)	C (mm)	WEIGHT (KG)	
Heat Exchangers Standard	Enthalpy Heat Exchangers				Heat Exchangers Standard	Enthalpy Heat Exchangers
RHR-CF-V 170	-	670	1200	685	56	-
RHR-CF-V 270	-	670	1200	760	64	-
RHR-CF-V 360	-	670	1200	810	66	-
RHR-CF-V 600	-	780	1140	850	75	-
RHR-CF-V 460	-	780	1140	850	75	-
RHR-CF-V 180 PRO	RHR-CF-V 180 PRO M	720	1200	760	64	69
RHR-CF-V 280 PRO	RHR-CF-V 280 PRO M	720	1200	810	66	71
RHR-CF-V 370 PRO	RHR-CF-V 370 PRO M	780	1140	850	75	80
RHR-CF-V 460 PRO	RHR-CF-V 460 PRO M	780	1140	850	75	80
RHR-CF-V 600 PRO	RHR-CF-V 600 PRO M	780	1140	850	75	80

Installation instructions RHR-CF

7. Technical data/ energy

7.1 Technical data/ energy - Standard RHR-CF-V

Model		RHR-CF-V 170	RHR-CF-V 270	RHR-CF-V 360	RHR-CF-V 460	RHR-CF-V 600
Length	mm	505	580	630	680	680
Width	mm	547	547	547	660	660
Height	mm	1041	1041	1041	980	980
Diameter of Connections	-	DN125	DN160	DN160	DN180	DN180
Weight	kg	47	51	56	59	60
Maximum Flow Rate	m3/h	170	270	360	460	600
Available Static pressure at maximum flow rate	Pa	100	100	100	100	100
Flow rate of reference	m3/h	120	190	250	320	420
Available Static pressure at flow rate of reference	Pa	50	50	50	50	50
Minimum Flow Rate	m3/h	60	70	90	90	100
Maximum Available Static Pressure	Pa	250	250	350	400	450
Thermal Efficiency at flow rate of reference EN 13141-7	%	87%	87%	90%	89%	88%
Filtering Efficiency EN779 - ISO 16890	-	F7 supply - M5 exhaust ePM1 55% - ePM10 50%				
Fan Type	-	Centrifugal with EC brushless motor - Blades back - Curves at constant speed				
Maximum power output (fans and controllers)	W	45	76	125	215	300
Maximum current output (fans and controllers)	A	0.6	1.1	1.5	2.0	2.2
Electric power supply	-	Single phase -230 V – 50 Hz				
Consumption in standby	-	<1W				
Safety Property	-	Protection: IP21 EC Compliant				
Integrated modulating electric resistance	-	**RHR-CF-V 170 EL** **RHR-CF-V 170 ER**	**RHR-CF-V 270 EL** **RHR-CF-V 270 ER**	**RHR-CF-V 360 EL** **RHR-CF-V 360 ER**	**RHR-CF-V 460 EL** **RHR-CF-V 460 ER**	**RHR-CF-V 600 EL** **RHR-CF-V 600 ER**
Preheating resistance power	W	500	900	1250	1600	2000
Maximum current output with resistance	A	3	5	7	9.2	10

Installation instructions RHR-CF

7.2 Technical data/ energy - RHR-CF-V PRO

Model		RHR-CF-V 180 PRO	RHR-CF-V 280 PRO	RHR-CF-V 370 PRO	RHR-CF-V 460 PRO	RHR-CF-V 600 PRO
Length	mm	580	630	680	680	680
Width	mm	600	600	600	660	660
Height	mm	1041	1041	980	980	980
Diameter of Connections	-	DN125	DN160	DN160	DN180	DN180
Weight	kg	47	51	56	59	60
Maximum Flow Rate	m3/h	180	280	370	460	600
Available Static pressure at maximum flow rate	Pa	100	100	100	100	100
Flow rate of reference	m3/h	130	200	260	320	420
Available Static pressure at flow rate of reference	Pa	50	50	50	50	50
Minimum Flow Rate	m3/h	50	70	50	90	100
Maximum Available Static Pressure	Pa	160	240	390	400	450
Thermal Efficiency at flow rate of reference EN 13141-7	%	91%	91%	92%	89%	88%
Filtering Efficiency EN779 - ISO 16890	-	F7 supply - M5 exhaust ePM1 55% - ePM10 50%				
Fan Type	-	Centrifugal with EC brushless motor - Blades back - Curves at constant spe-ed				
Maximum power output (fans and controllers)	W	50	70	120	215	300
Maximum current output (fans and controllers)	A	0.6	1.0	1.0	2.0	2.2
Electric power supply	-	Single phase -230 V – 50 Hz				
Consumption in standby	-	<1W				
Safety Property	-	Protection: IP21 EC Compliant				
Models with integrated modulating resistance	-	RHR-CF-V 180 PRO EL RHR-CF-V 180 PRO ER	RHR-CF-V 280 PRO EL RHR-CF-V 280 PRO ER	RHR-CF-V 370 PRO EL RHR-CF-V 370 PRO ER	RHR-CF-V 460 PRO EL RHR-CF-V 460 PRO ER	RHR-CF-V 600 PRO EL RHR-CF-V 600 PRO ER
Preheating resistance power	W	500	900	1250	1600	2000
Maximum current output with resistance	A	3	5	7	9.22	10

Installation instructions RHR-CF

7.3 Technical data/ energy - RHR-CF-V PRO M Models fitted with enthalpy heat exchangers

Model		RHR-CF-V 180 PRO M	RHR-CF-V 280 PRO M	RHR-CF-V 370 PRO M	RHR-CF-V 460 PRO M	RHR-CF-V 600 PRO M
Length	mm	580	630	680	680	680
Width	mm	600	600	660	660	660
Height	mm	1041	1041	980	980	980
Diameter of Connections	-	DN125	DN160	DN160	DN180	DN180
Weight	kg	52	56	61	64	65
Maximum Flow Rate	m3/h	180	280	370	460	600
Available Static pressure at maximum flow rate	Pa	100	100	100	100	100
Flow rate of reference	m3/h	130	200	260	320	420
Available Static pressure at flow rate of reference	Pa	50	50	50	50	50
Minimum Flow Rate	m3/h	50	70	50	90	100
Maximum Available Static Pressure	Pa	160	240	390	400	450
Thermal Efficiency at flow rate of reference EN 13141-7	%	88.6%	84.8%	82.7%	81.5%	75,0%
Thermal hygromeric at flow rate of reference EN 13141-7	%	72.1%	65.6%	63.4%	58.4%	55.8%
Filtering Efficiency EN779 - ISO 16890	-	F7 supply - M5 exhaust ePM1 55% - ePM10 50%				
Fan Type	-	Centrifugal with EC brushless motor - Blades back - Curves at constant speed				
Maximum power output (fans and controllers)	W	50	70	120	215	300
Maximum current output (fans and controllers)	A	0.6	1.0	1.0	2.0	2.2
Electric power supply	-	Single phase -230 V – 50 Hz				
Consumption in standby	-	<1W				
Safety Property	-	Protection: IP21 EC Compliant				
Models with integrated modulating resistance	-	RHR-CF-V 180 PRO ELM RHR-CF-V 180 PRO ERM	RHR-CF-V 280 PRO ELM RHR-CF-V 280 PRO ERM	RHR-CF-V 370 PRO ELM RHR-CF-V 370 PRO ERM	RHR-CF-V 460 PRO ELM RHR-CF-V 460 PRO ERM	RHR-CF-V 600 PRO ELM RHR-CF-V 600 PRO ERM
Preheating resistance power	W	500	900	1250	1600	2000
Maximum current output with resistance	A	3	5	7	9.2	10

Installation instructions RHR-CF

8. Description of machine components

Fig. 5

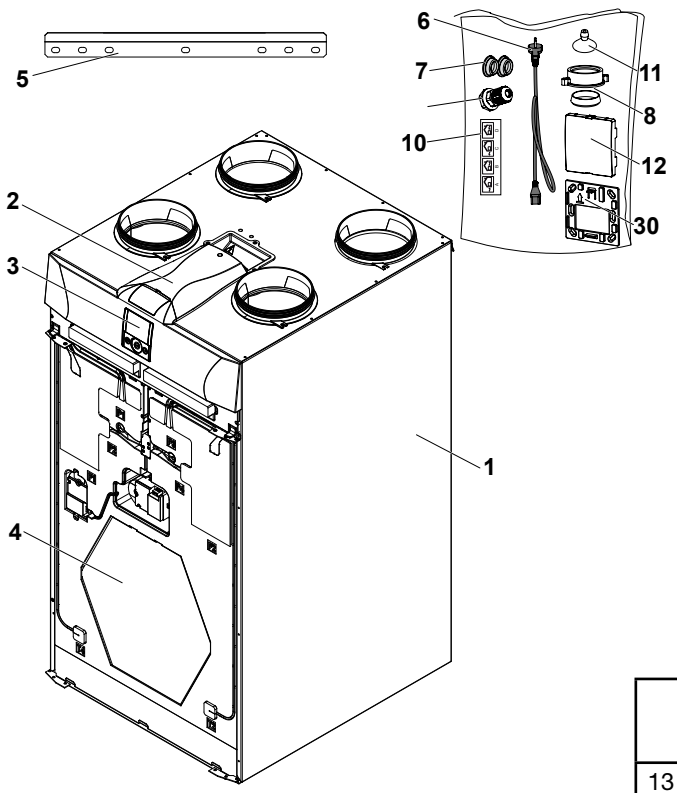

1 - Appliance for residential ventilation
2 - Power board
3 - T-EP capacitive touch controller
4 - Heat exchanger
5 - Hanging bracket
6 - Power cord
7 - Spacer foot
8 - Condensate drain plug
9 - Cable gland PG7
10 - Shank label (to use for right side connection)
11 - Suction cup
12 - Front cap (for remote control)
30 - T-EP support for wall mounting

Fig. 6

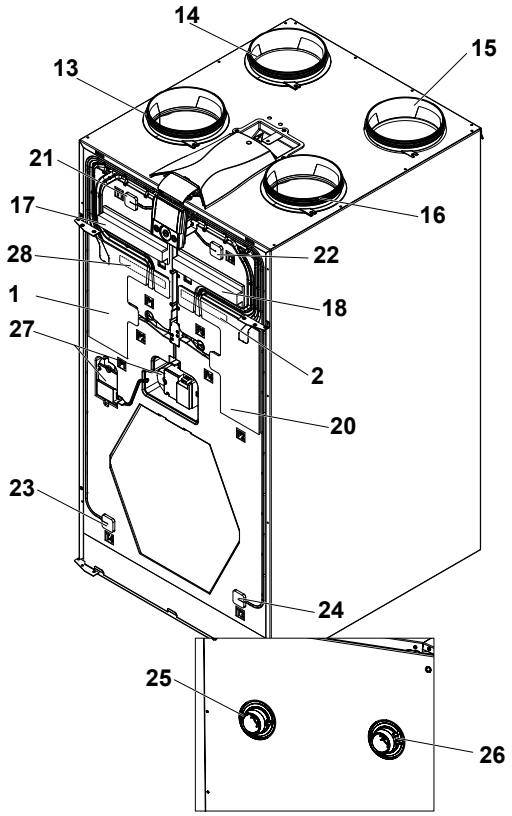

	Left side connection (standard configuration)	Right side connection (supplementary config.)
13	Outdoor air connection	Extracted stale air connection
14	Exhaust air connection	Supply air connection
15	Supply air connection	Exhaust air connection
16	Extracted stale air connection	Outdoor air connection
17	Filter class F7 (outdoor air)	Filter class M5 (extracted stale air)
18	Filter class M5 (extracted stale air)	Filter class F7 (outdoor air)
19	Supply air fan	Stale air exhaust fan
20	Stale air exhaust fan	Supply air fan
21	Outdoor air temperature probe (T1)	Extracted stale air temperature probe (T3)
22	Extracted stale air temperature probe (T3)	Outdoor air temperature probe (T1)
23	Exhaust air temperature probe	(T4)Supply air temperature probe (T2)
24	Supply air temperature probe (T2)	Exhaust air temperature probe
25	Condensate drain	-
26	-	Condensate drain
27	Bypass Damper System	Bypass Damper System
28	LH Integrated Resistance (if any)	-
29	-	RH Integrated Resistance (if any)

Installation instructions RHR-CF

9. Installation

INSTALLATION TO BE CARRIED OUT EXCLUSIVELY BY QUALIFIED PERSONNEL

Attention! Installation of the appliance for residential ventilation must only be carried out by qualified personnel to avoid damage or injury.

Attention! To protect the system against dirt and humidity, all the openings must remain closed until commissioning, for example using protective covers.

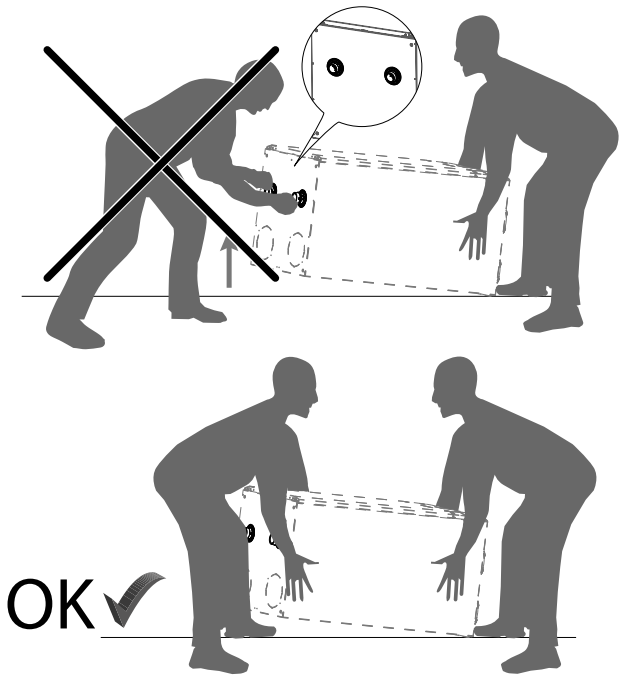

Attention! Do not position the unit with the weight on the drain connections.

Mechanical loads on the drains could irreversibly damage the unit.

Pay equal attention while making the connection to the drain pipe in order to avoid damage.

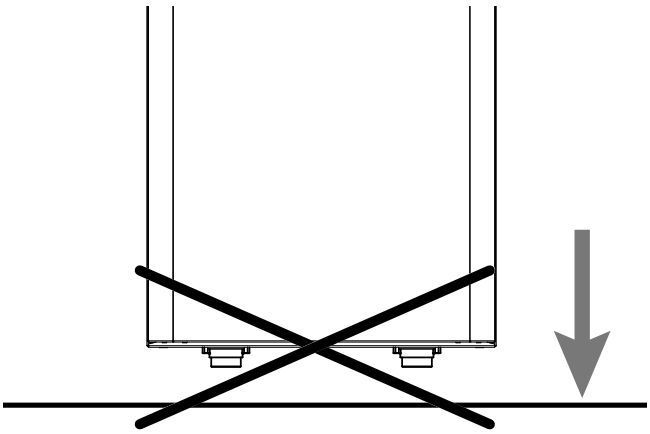

9.1 Installation instructions

- The residential ventilation appliance should be installed in dry environments with the temperature above 12°C, for example in a utility room. Installation temperature: from +12 °C to +40 °C.
- Relative humidity (installation environment): max. 60%.
- Storage temperature: -20 ° C to +60 ° C.

PLEASE NOTE: if the temperature in the installation room drops below 12°C, there could occasionally be condensate on the external covering of the appliance.

- Position the appliance so that the section up to the external outlet of the outdoor air and exhaust air inlet ducts is as short as possible.
- The vibrations produced by the residential ventilation appliance must be dampened. The installed appliance must be soundproofed.
- The residential ventilation appliance is mounted with a wall bracket (supplied with the machine).
- The appliance can be mounted on the floor using optional stands.
- The appliance must be accessible to perform maintenance and repairs.
- Air flow rates must be set correctly in compliance with standard DIN 1946, part 6.
- The appliance can be commissioned after having completed installation of the entire residential ventilation system.

9.2 Wall installation of appliance

Fastening the bracket to the wall

Take the bracket and apply it to the wall, making sure that it is attached in a horizontal position using a spirit level, as described in the figure below (Fig. 7).

PLEASE NOTE: the screws are not included. Choose the screws and relative plugs based on the type of wall.

1 - Position the bracket and drill the necessary holes (Fig.7).

Make sure the appliance is horizontal.

2 - Secure the bracket by applying the screws.

Installation instructions RHR-CF

9. Installation

9.2 Wall installation of appliance

Fastening the bracket to the wall

Take the bracket and apply it to the wall, making sure that it is attached in a horizontal position using a spirit level, as described in the figure below (Fig. 7).

PLEASE NOTE: the screws are not included. Choose the screws and relative plugs based on the type of wall.

1 - Position the bracket and drill the necessary holes (Fig.7).

Make sure the appliance is horizontal.

2 - Secure the bracket by applying the screws.

Fig. 7

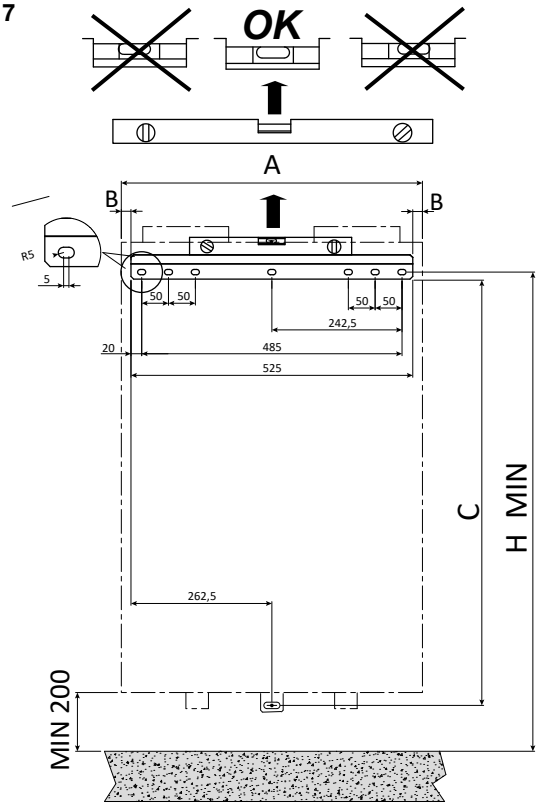

Model	H MIN (mm)	A (mm)	B (mm)	C (mm)
RHR-CF-V 170 - 170 EL - 170 ER	1190	600	11	1000
RHR-CF-V 270 - 270 EL - 270 ER	1190	600	11	1000
RHR-CF-V 360 - 360 EL - 360 ER	1190	600	11	1000
RHR-CF-V 460 - 460 EL - 460 ER	1130	660	67.5	940
ERHR-CF-V 600 - 600 EL - 600 ER	1130	660	67.5	940
RHR-CF-V 180 PRO* -180 PRO EL -180 PRO ER	1190	600	37.5	1000
RHR-CF-V 280 PRO* -280 PRO EL -280 PRO ER	1190	600	37.5	1000
RHR-CF-V 370 PRO* -370 PRO EL -370 PRO ER	1130	660	67.5	940
RHR-CF-V 460 PRO* -460 PRO EL -460 PRO ER	1130	660	67.5	940
RHR-CF-V 600 PRO* - 600 PRO EL -600 PRO ER	1130	660	67.5	940

* Dimensions are also valid for enthalpy models

Installation instructions

RHR-CF

9.3 Positioning the appliance

1. Position the appliance by hooking it to the hanging bracket (1).
2. Position the supplied spacer foot (2) to guarantee that the appliance is level.
3. Secure the appliance to the wall (3).
4. Mount the condensate drain at the bottom of the appliance.

PLEASE NOTE: the screws are not included in the supply. Choose the screws and relative plugs based on the type of wall.

Fig. 8

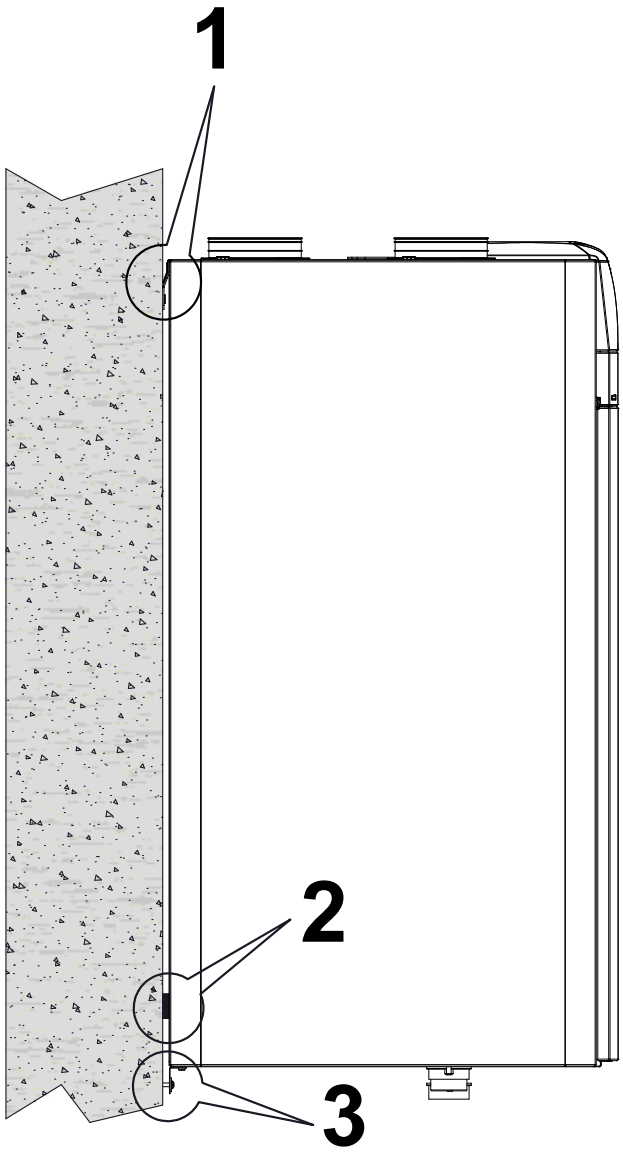

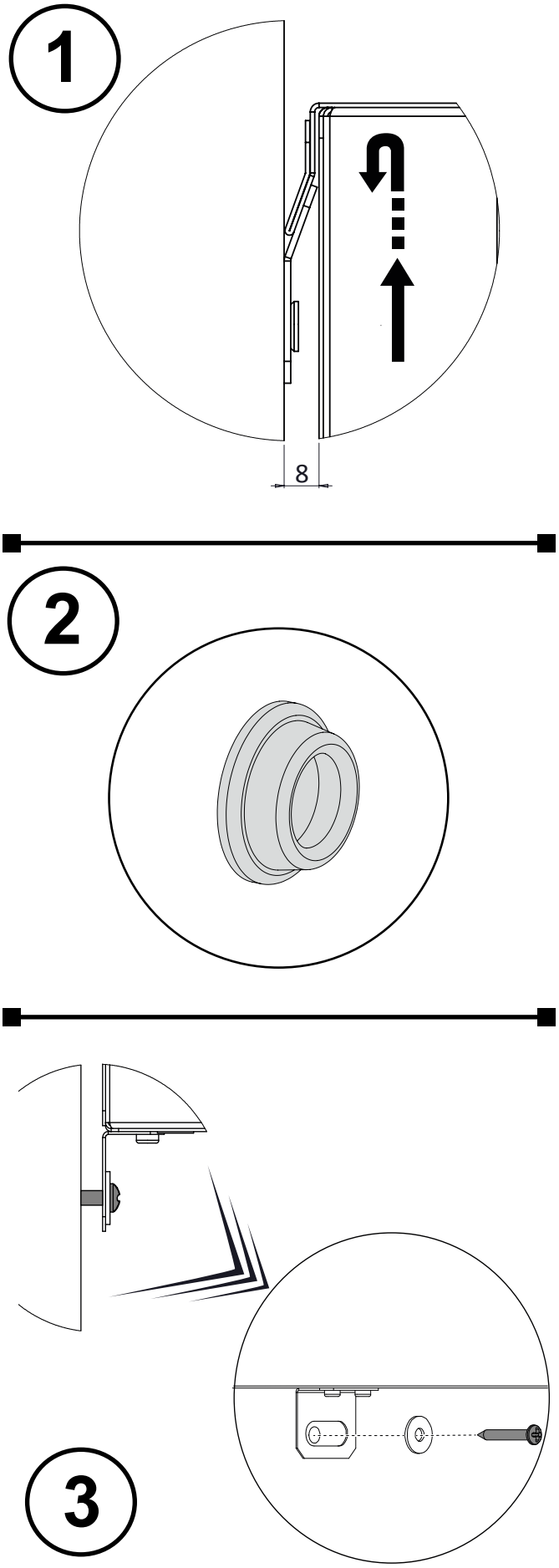

Installation instructions RHR-CF

9.4 Condensate drain connection

The connection for the condensate drain is located underneath the appliance:

Connect the condensate drain to the domestic sewage system using a duct or pipe (siphoned).

Condensate must be drained from a minimum height of 100 mm.

PLEASE NOTE: if you choose the version with right side connection, invert the condensate drain plug (see paragraph **"How to change connection").**

Fig. 9

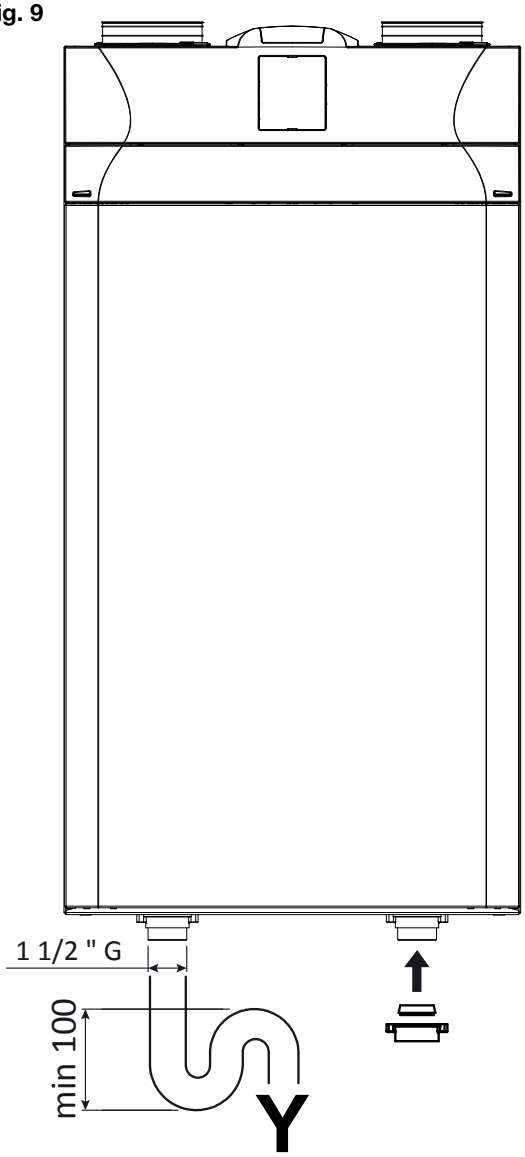

Attention! Make sure that the siphon of the condensate drain connected to the domestic sewer system is always full of water.

Attention! Make sure that the end of the siphon is at least 100 mm below the water level.

9.5 Floor installation of appliance

OPTIONAL ACCESSORY

As an alternative, the residential ventilation appliance can be installed using the floor stands.

Fixing the stands

Fig. 10

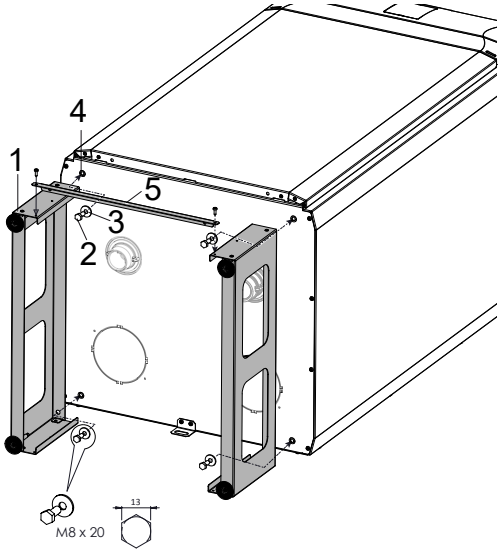

1. Fix the stands(1) using the screws (2) and washers (3),supplied with the accessory, at the bottom of the appliance (4). Fasten the crossbar (5) to the support (1).
2. Lift the unit and position it vertically
3. Use a spirit level to check the position of the appliance.

Fig. 11

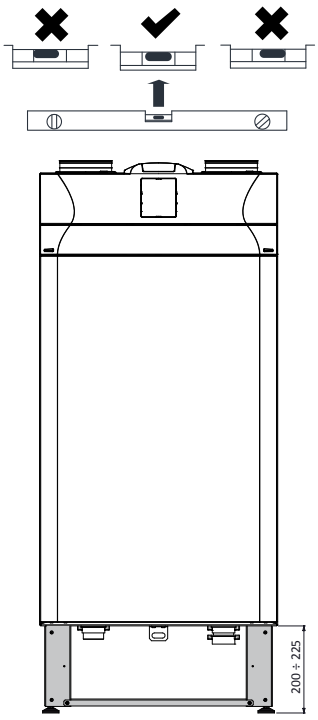

Installation instructions RHR-CF

10. Electrical connections

- Before installing the appliance, make sure that the rated supply voltage is 230V - 50 Hz.
- Make sure that the electric system is suitable to supply, in addition to the operating current required by the unit, the current necessary to supply the household appliances and equipment already in use.
- Perform the electrical connections according to national laws and standards in force.
- Install an omnipolar switch upstream of the unit with a minimum contact distance of 3.5 mm.
- The unit must always be earthed.
- Check the power cord is in perfect condition. In no case must you repair a damaged cord with insulation tape or clamps.
  If the power cord is damaged, it must be replaced by the Technical Assistance Service or anyhow by an indi-vidual with a similar qualification to prevent any risk.
- The appliances for residential ventilation are built with the display controller on board the unit.
- When the appliance is connected electrically the controller is also powered.

- Take the power cord from the accessory bag.
- Couple the cord to the machine.
- Plug in the power cord.

Fig. 12

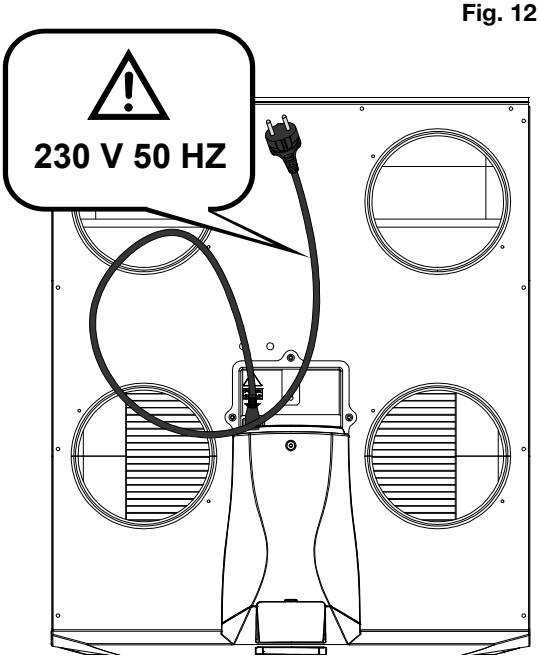

10.1 Power board

Fig. 13

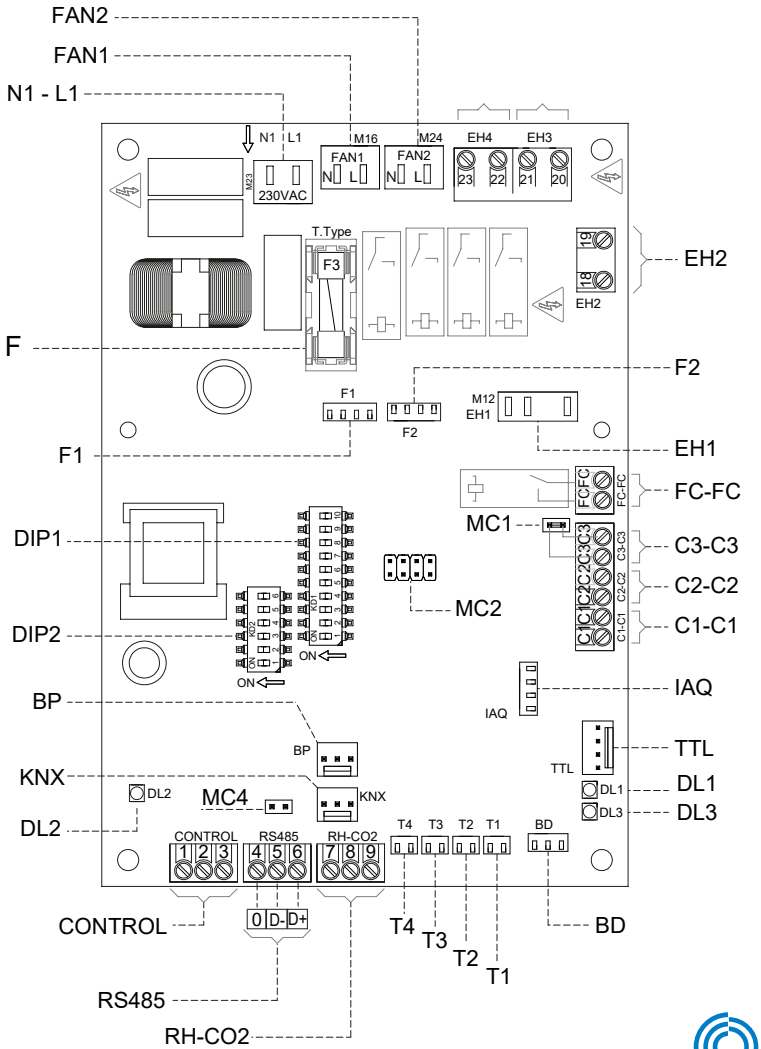

Installation instructions RHR-CF

Power board key

Item	*Description*	*Notes*
N1-L1	230 Volt power terminals	-
F	Fuse 5x20	-
FAN 1	230 Volt power supply - fan 1	-
FAN 2	230 Volt power supply - fan 2	-
F1	0-10 Volt signal - fan 1	Fan 2 with inverse configuration
F2	0-10 Volt signal - fan 2	Fan 1 with inverse configuration
T1 ÷ T4	Temperature sensors	-
CONTROL	Control panel	T-EP controller supplied with unit
C1-C1	NO potential.free contact (input)	Remote On/Off function – unit Off when the contact is closed
C2-C2	NO potential-free contact (input)	Booster function active when the contact is closed
C3-C3	NC potential-free contact (input) (active only if JUMPER MC1 open)	See Fireplace and Boiler functions
FC-FC	SPST Potential-free contact	-
IAQ	Internal relative humidity sensor	-
RS485	Modbus Connection	-
DIP 1	Configuration Dip Switch	See Configuration Dip Switch table
DIP 2	Address Dip Switch for ModBus networks	8 Dip Switches - for max 60 units
MC4	Master/slave jumper or Modbus network	The network must be closed on the last unit in case of RS485 Modbus connection. It is closed by closing Jumper MC4.
BP	Differential pressure sensor connection for automatic air flow rate control	Accessory for **RHR-CF-V** models Standard for **RHR-CF-V PRO** models
BD	By-pass damper connection (Free Cooling)	-
TTL	Connection for additional boards	Accessory/ Optional
EH1	PWM control preheating output	-
EH2	Pre-Treatment output for controlling 230 Volt ON/OFF actuators or enabling external modulating resistance	Antifreeze with external systems
DL2	Power on LED	-
DL3	Status and alarm LED	See alarm table

Installation instructions RHR-CF

10.2 Dip switch configuration (DIP1)

DIP NO.	DEFAULT	OFF	ON
1	OFF	LH Fan Config. (standard configuration)	RH Fan Config. Right side connection (supplementary config.)
2	OFF	No Pre-Treatment Air	Pre-Treatment Air Present
3	OFF	If DIP2 ON Modulating electric resistance	If DIP2 ON and **DIP7 OFF** Electric Resistance ON/OFF Hot water coil with ON/OFF valve
4	OFF	N/A	N/A
5	OFF	N/A	N/A
6	OFF	FC-FC transmits error signal to remote control unit	FC-FC closes with the unit in ON position in order to provide the ignition consent of the accessory electrostatic filter Crystall Round
7	OFF	No Geothermal Hydronic Coil	**If DIP2 and DIP3 ON** Geothermal Hydronic Coil Present
8	OFF	Contact C3-C3 with function that prevents negative ambient pressure in presence of chimney	Contact C3-C3 with atmospheric boiler start-up booster
9	OFF	If DIP2 ON Internal modulating preheating resistance	If DIP2 ON, DIP3 OFF External modulating preheating resistance
10	OFF	N/A	N/A

Installation instructions RHR-CF

10.3 Connection with remote control

The control is provided by default fitted on the appli-ance, however it can also be remoted by fitting it on the wall.

Always disconnect power before accessing the unit.

1- Remove the controller from the front panel using the suction cup accessory.

2- Remove the 3-pole connector coupled to the controller.

Fig. 14

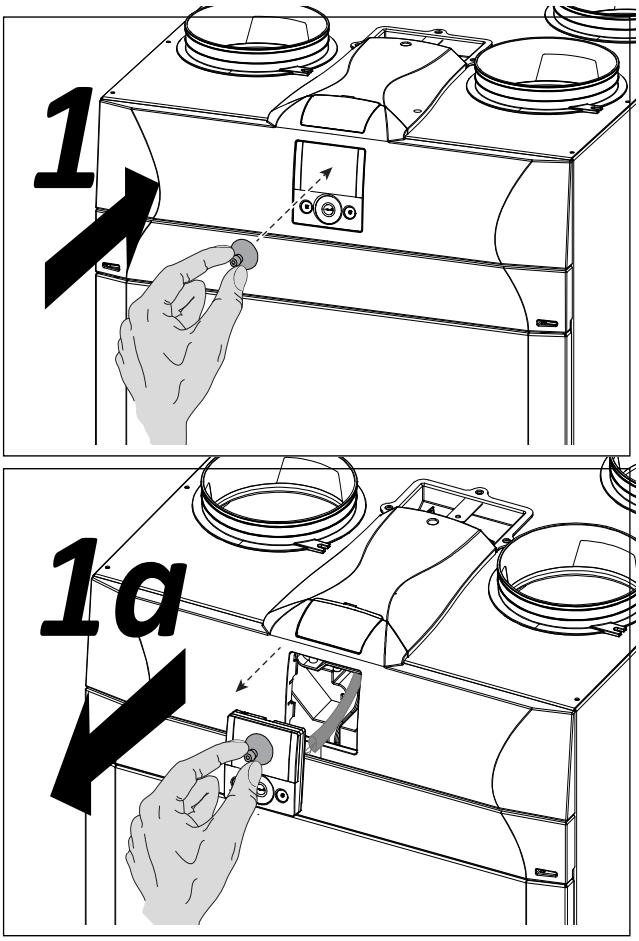

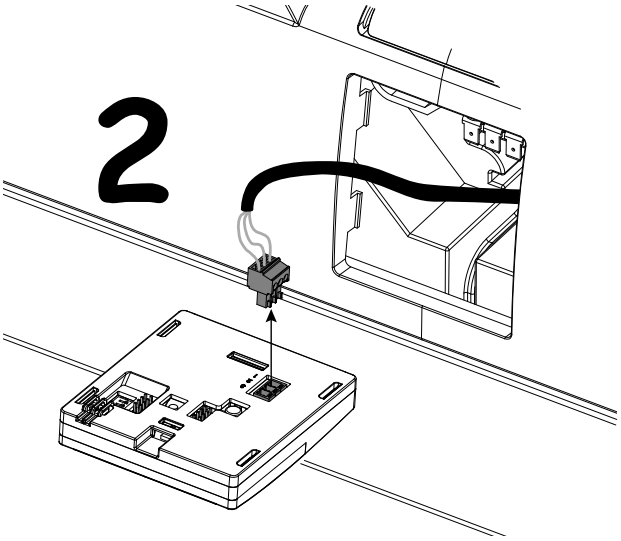

3- Unscrew the top cover to access the electric compartment where the power board is located.

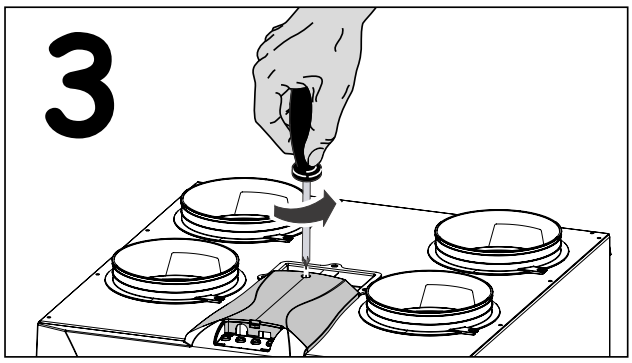

4- Remove the cable connected to the CONTROL connector (*terminals 1-2-3*) of the power board.

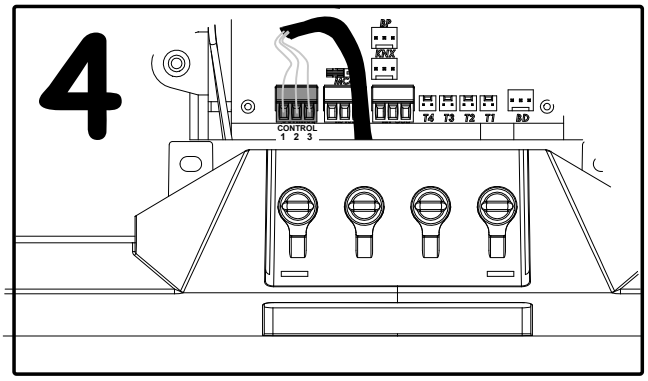

5- Perform the new connection to position the con-troller on the wall, respecting the sequence of the terminal numbers:

a) apply the supplied cable gland as indicated in the figure;

b) fix the cable in the cable gland;

c) connect the cable to terminals1-2-3 from the power board to the controller respecting the numbers

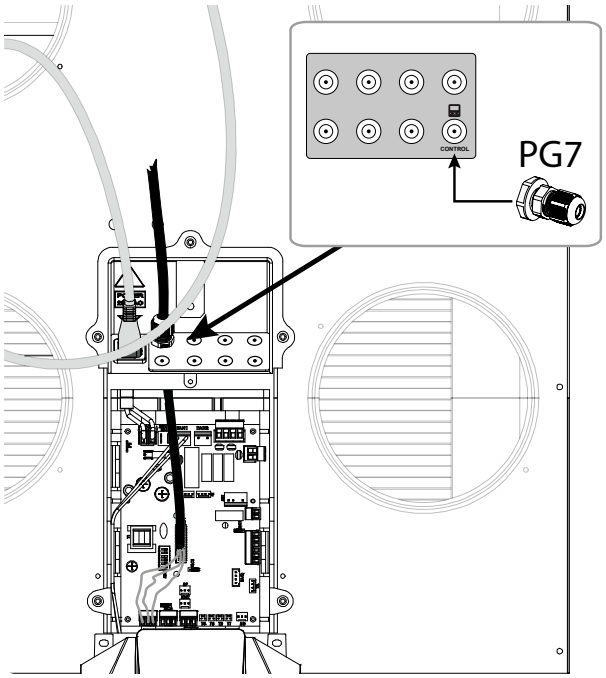

Installation instructions RHR-CF

11. Controller

11.1 Installing controller on the wall

Fig. 15

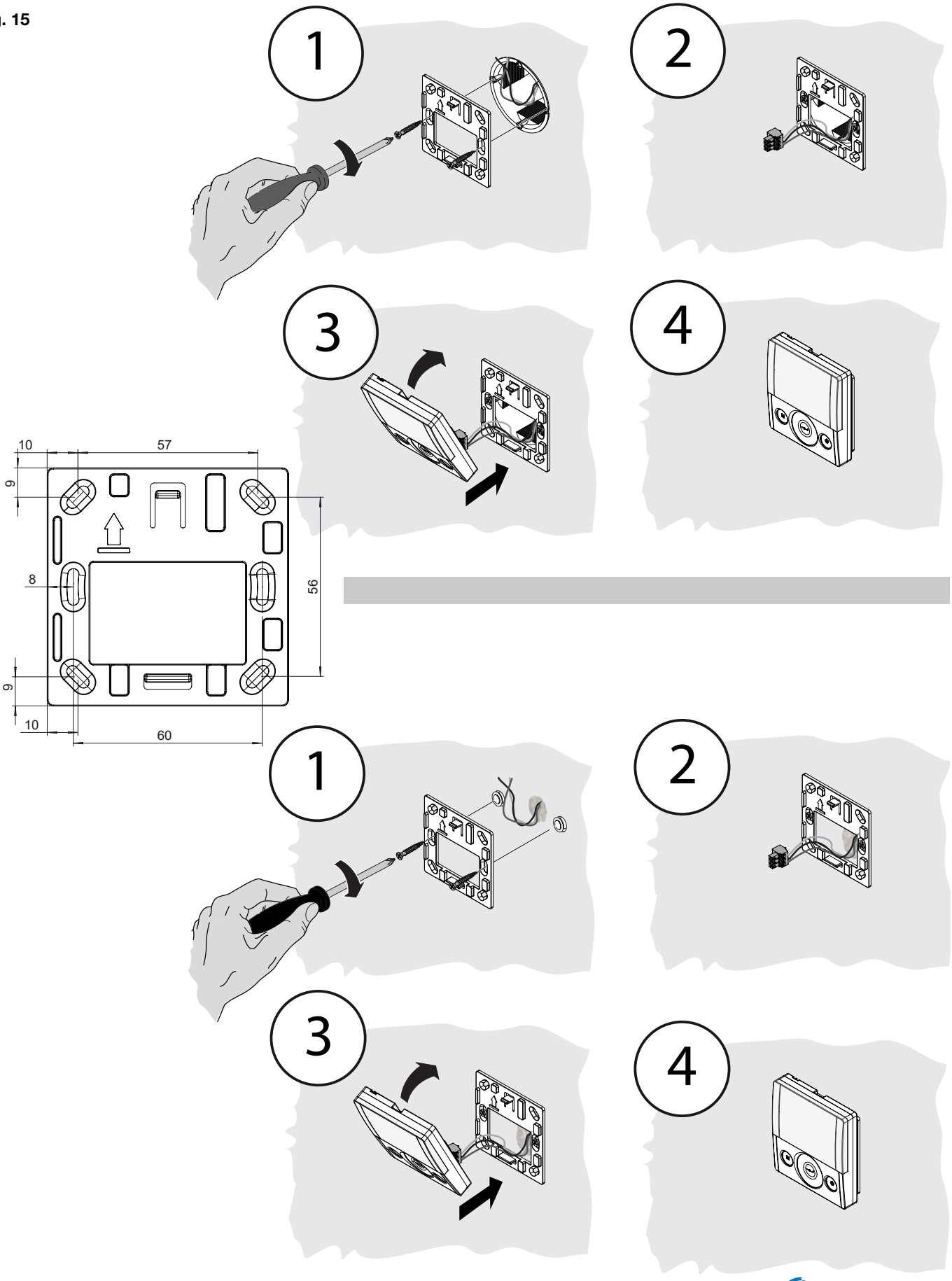

Installation instructions RHR-CF

11.2 T-EP touch controller

This device was designed for the control of controlled mechanical ventilation units. It is suitable for ENERGY SMART units.

The Main Screen on the control panel permits access to two settings sub-menus:

1. USER Settings Menu where the user can select the operating mode and set the clock;
2. TECHNICAL Settings Menu where the installer can calibrate the flow rate, change the standard unit operating parameters and monitor the operating state.

On the main screen, the user can view alarm reports and main readings of the temperature and humidity.

The USER Settings Menu offers these options:

1. Manual selection of the following preset ventilation modes:

a) Party Mode - Intensive timed ventilation

b) Holiday Mode - Permanent or timed anti-mould ventilation.

2. Automatic Mode - Available for units equipped with air quality sensor (humidity or CO2).

3. Customised selection of desired air flow rate in manual mode:

a) 100% - Nominal ventilation (standard)

b) 70% - Reduced ventilation (nighttime)

c) 45% - Humidity Control for High Humidity Rate Environments

d) 25% - Humidity Control for Low Humidity Rate Environments

4. Weekly Programming.

The MAIN SCREEN features the following options:

1. The preheating icon indicates activation of Anti-freeze mode.
2. A timed warning icon lights up to suggest filter replacement.
3. A damper bypass icon indicates automatic activa-tion of free-cooling mode.
4. Weekly Program Display [4].

Fig. 16

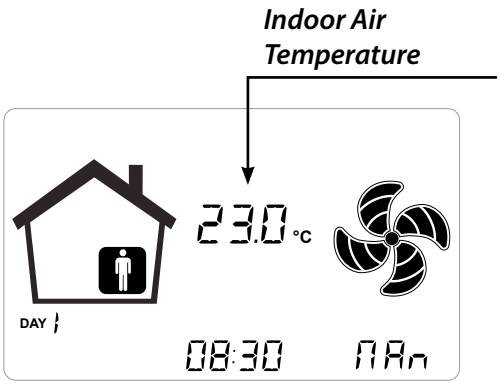

The TECHNICAL Menu offers these options:

1. Option of confirming or editing the operating parameters.
2. Monitoring of work conditions.
3. Setting the nominal calibration speed of the fans.
4. Input and Selection of the Weekly Program available to the user.

---

4 The four Weekly Programs can be set by the installer and another 4 weekly programs can be set up according to the user's specific requirements.

The User Settings menu allows the user to enable or disable the Weekly Program configured by the installer.

Installation instructions RHR-CF

11.3 Description of the controller

Fig. 17

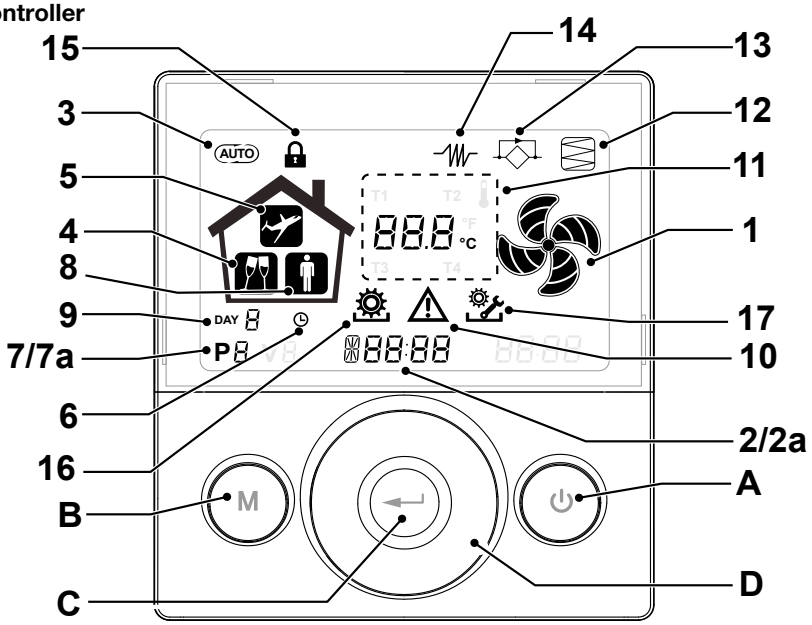

Keys

A		•Start and Stop the machine; •Access Technical Menu (only authorised staff): when the unit is ON, press the keys and at the same time for 5 seconds to access the menu.
B		•Access User Menu; •Access Technical Menu (only authorised staff): when the unit is ON, press the keys and at the same time for 5 seconds to access the menu; • Exit Menu.
C		• Confirm
D		• Move a finger on the **TOUCH PAD** to: • Increase/decrease the ventilation speed; or the setting parameters; • Scroll between functions.

Display - Functions

1		• Manual Ventilation function.
2		• Booster function
3	AUTO	• Automatic mode.
4		• Preset ventilation: Party mode
5		• Preset ventilation: Holiday mode
6		• Time setting • Current day setting
7	P	• Weekly program activation • Weekly program deactivation

Display - Alerts and alarms

2a		• Display of current time • Text field
7a	P	• Number of current program
8		• Presence of Person
9	DAY	• Current day
10		• Alarm alert
11	°C	• Value alert (Temperature, voltage)
12		• Filter Maintenance/Dirty filter
13		• Bypass in use - Free-cooling mode
14		• Preheating - Antifreeze mode icon
15		• Function lock activated
16		• User Menu active
17		• Installer settings menu active
18	C	• Crystall Round filter present

Installation instructions RHR-CF

12. Commissioning

The connections can be swapped to allow for flexible installation of the appliances for residential ventilation. The difference in the connections regards the position of the air connections, of the filters and of the condensate drain and RH sensor.

Fig. 18 Left side connection (standard version)

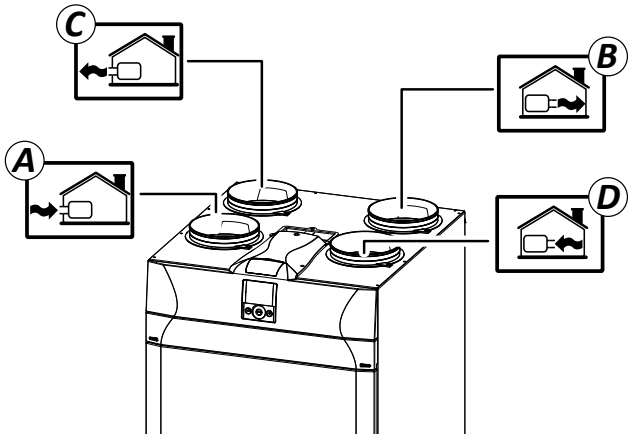

A - Outdoor air
B - Supply air
C - Exhaust air
D - Extracted stale air

Fig. 19 Right side connection (supplementary version)

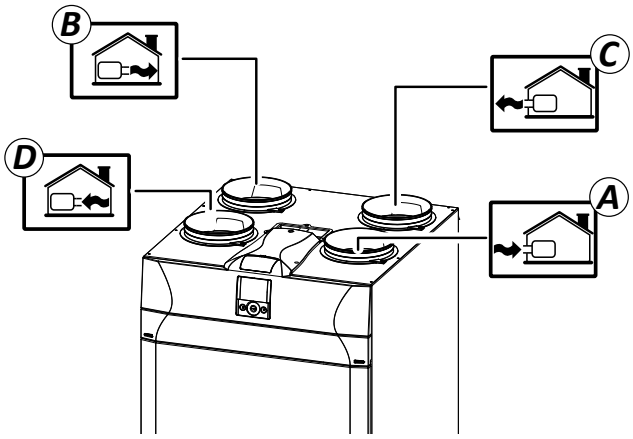

A - Outdoor air
B - Supply air
C - Exhaust air
D - Extracted stale air

PLEASE NOTE: Apply the labels, supplied with the unit, based on the new configuration

How to change connection
For appliances not equipped with internal modulating electric resistance

The default appliance is set in the version with **left side connections.**
To change the machine to the RIGHT side version, proceed as follows:

Always disconnect power before accessing the unit.

1. Unscrew the top cover.

Fig. 20

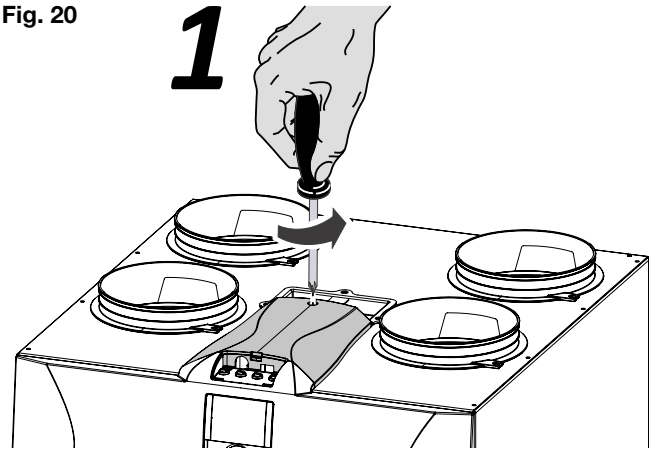

2. Remove the top cover.

Fig. 21

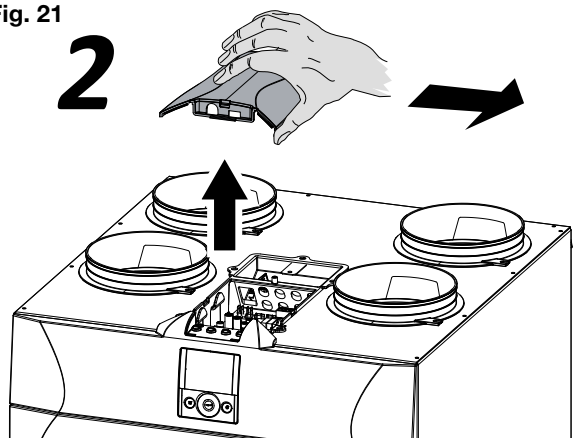

3. Position the DIP n°1 of the power board based on the desired connection:

DIP 1 = OFF LH installation (default)
DIP 1 = ON RH installation

Fig. 22

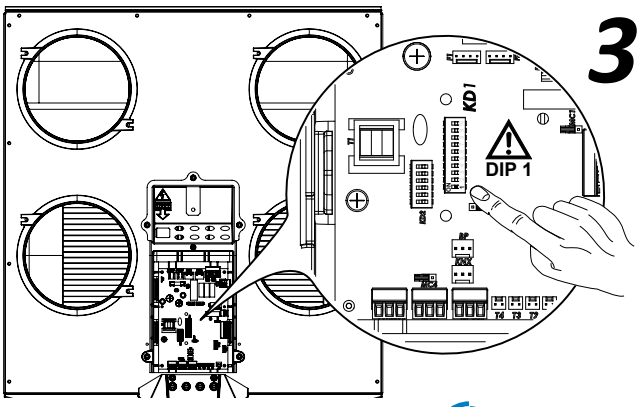

Installation instructions RHR-CF

4. Position the filters as in the figure based on the desired connection:

a - Open the front panel

Fig. 23

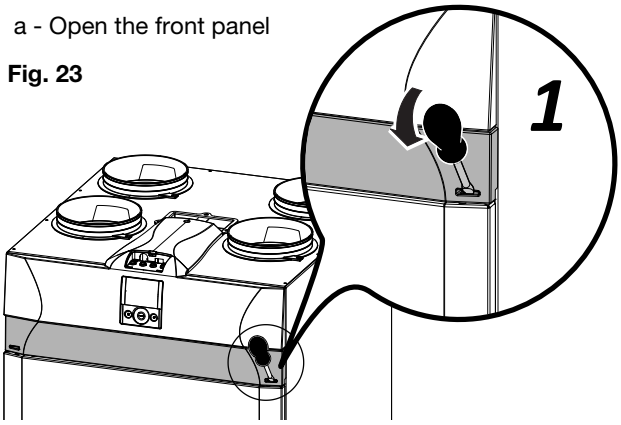

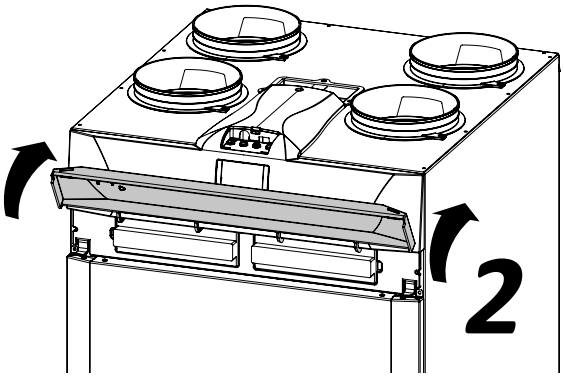

The operations related to the connection must only be carried out by qualified personnel to avoid damage or injury.

The units equipped with integrated electric resistance cannot undergo flow configuration inversion. The machine must be purchased with resistance in the left or right side version depending on the envisaged installation requirements

b - remove the plugs from the filters

Standard Configuration

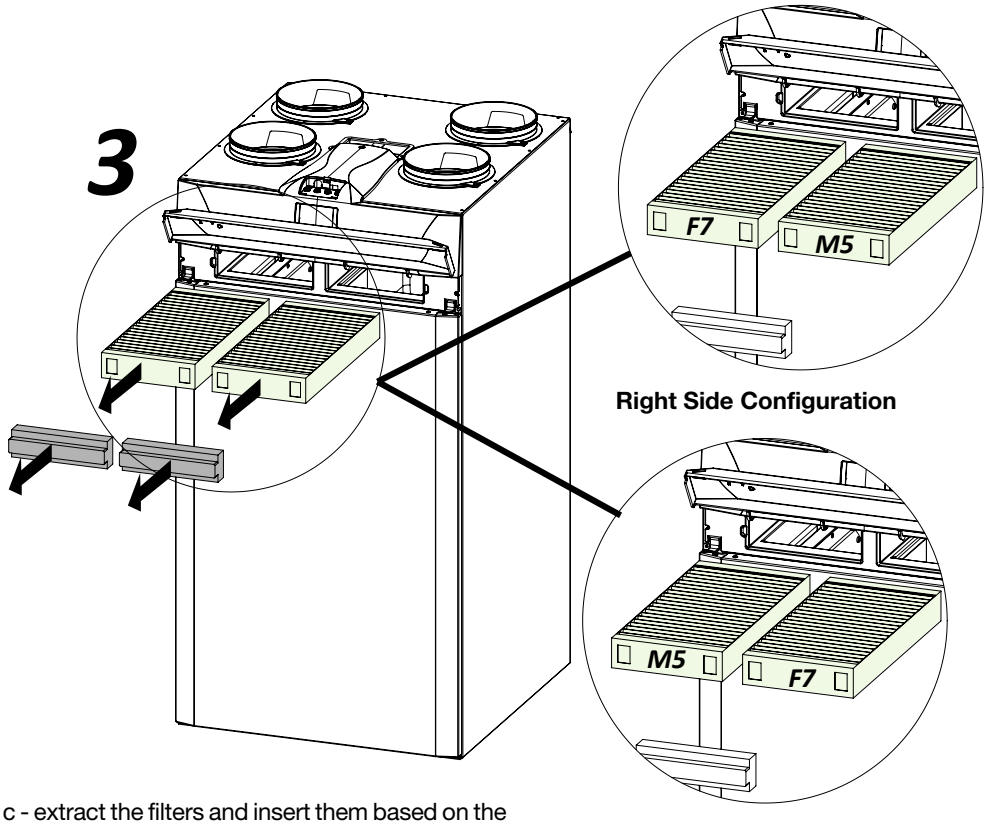

Right Side Configuration

c - extract the filters and insert them based on the chosen connection.

Installation instructions RHR-CF

13. Humidity sensor

13.1 Moving the humidity sensor for unit RHR-CF-V PRO

The sensor is placed by default in the version with **left side connections (standard see Fig. 24 picture 5).**

To position the sensor for the **Right side connection (supplementary version)** you must:

Fig. 24

1

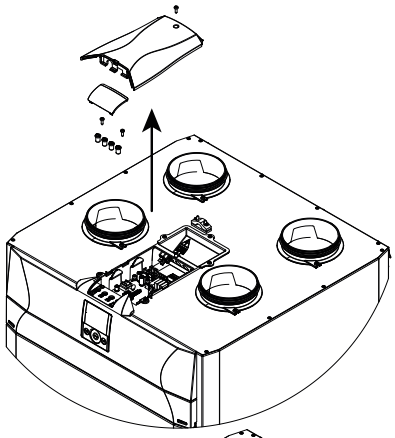

2

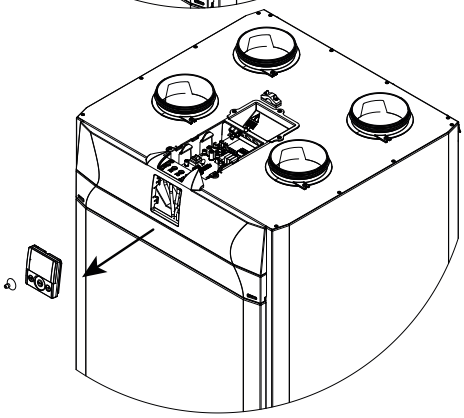

3

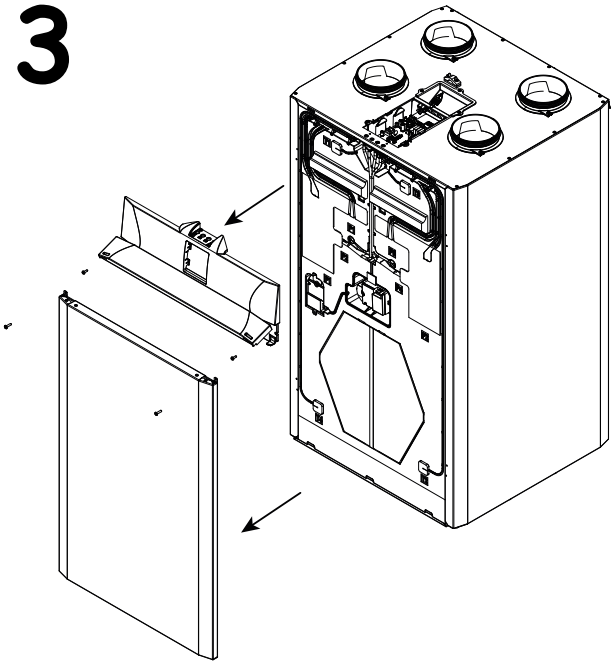

4

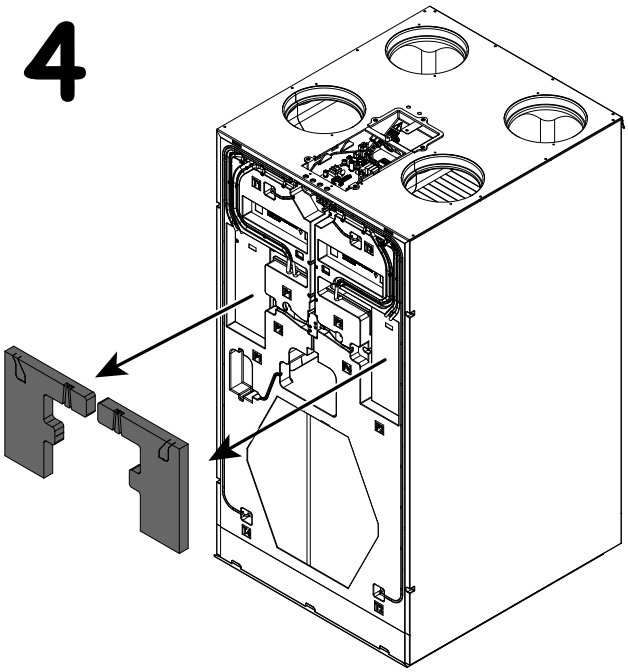

5

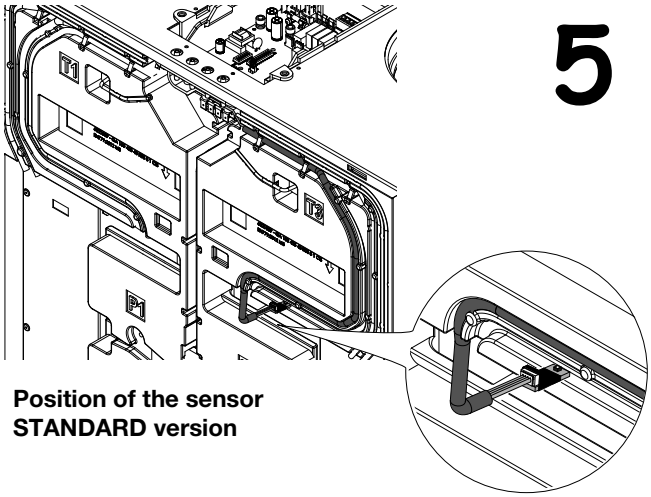

Position of the sensor STANDARD version

6

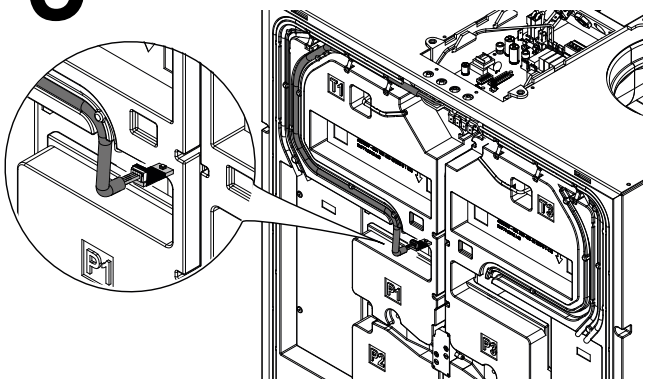

Position of the sensor RIGHT side version (supplementary)

Put all the components back in place and proceed with the assembly of the condensate drain.

In the event of installing the sensor as an accessory, follow the instructions of the information sheet attached to the accessory pack.

Installation instructions RHR-CF

14. Condensate drain connection

Position the condensate drain based on the desired connection:

Unscrew the plug and fix a drain or siphon as indicated in the figure.

Condensate must be drained from a minimum height of 100 mm.

If you choose the version with right side connection, swap the plug of the condensate drain.

Fig. 25

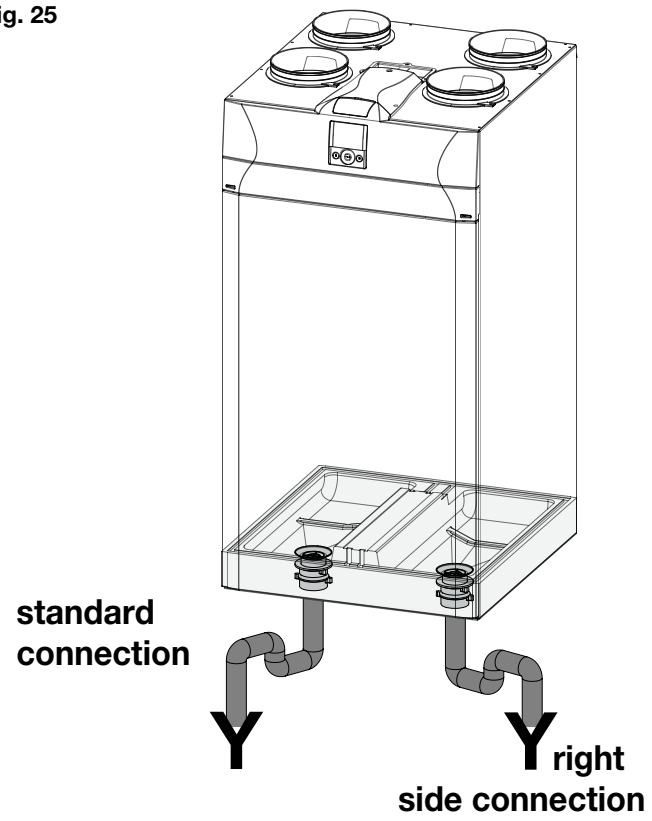

14.1 Setting the flow rates

Before setting flow rates, fans are run at factory default speed.

Before setting flow rates, Touch Pad is inhibited to perform any speed modulation. This is communicated by the message "**Tab**" blinking in the central field of the display.

WARNING!: no speed regulation is possible without first setting flow rate

Fig. 26

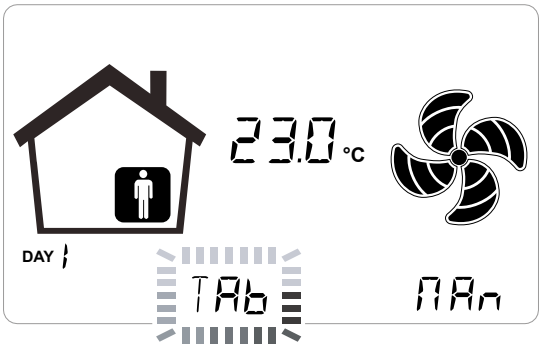

To set the air flow rate based on the number of fan revolutions, there are two possible types of calibration:

- **STANDARD CALIBRATION**
  In the absence of the Flow Rate Automatic Control System.
- **AUTOMATIC CALIBRATION**
  If there is the Automatic Flow Rate Control System.

14.2 Standard calibration- left side configuration

1. Use a screwdriver to remove the front panel cover.

Fig. 27

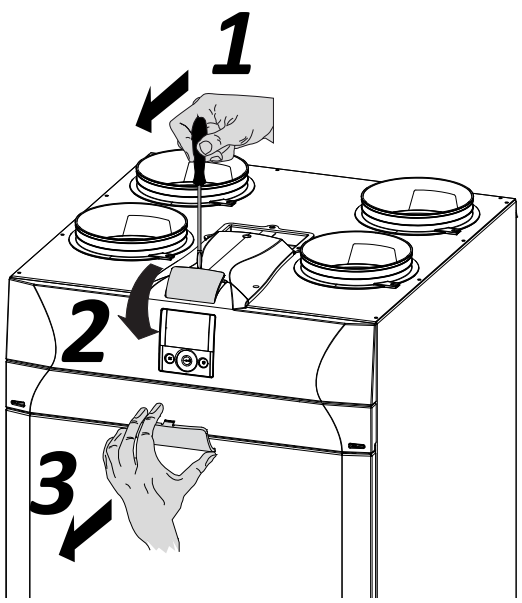

2. Remove the rubber caps of the connections P1 and P2 relative to fan V1.

Fig. 28

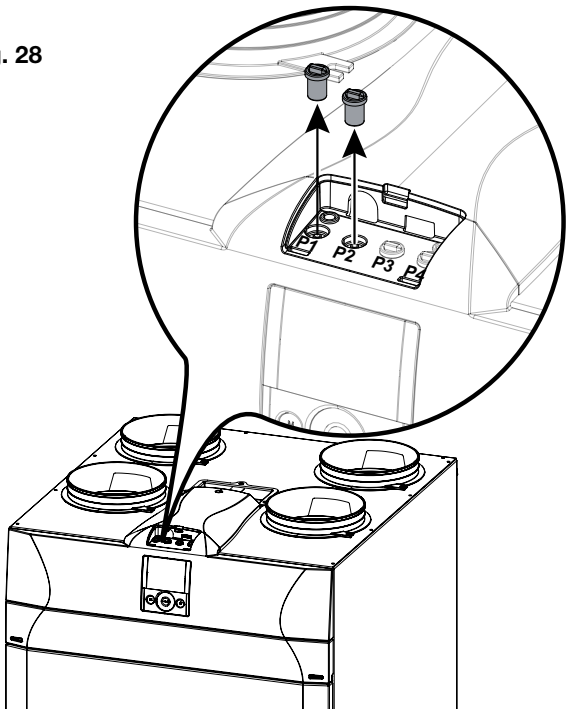

Installation instructions RHR-CF

3. Connect the differential pressure gauge.

Fig. 29

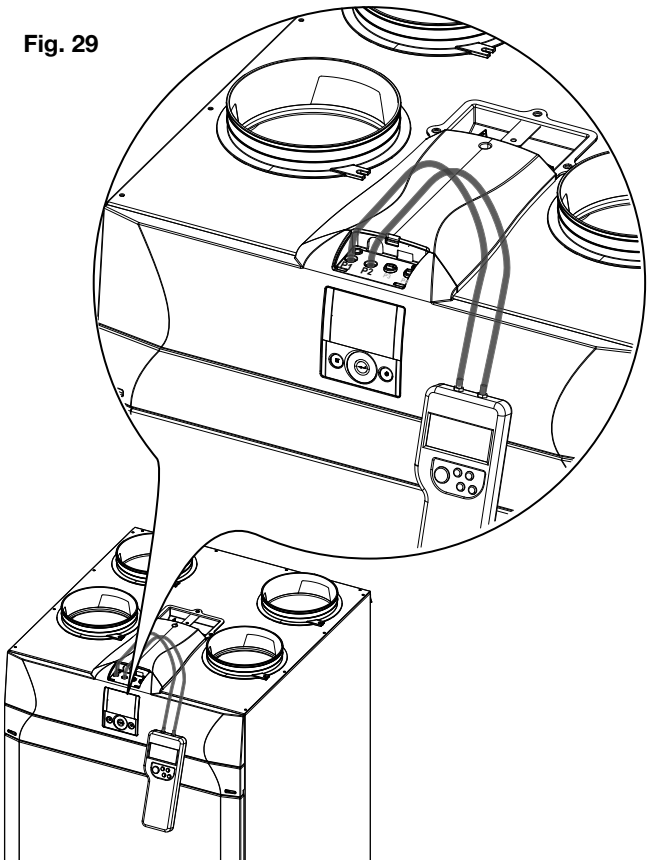

4. Turn on the appliance at the ON/OFF key on the display.

Fig. 30

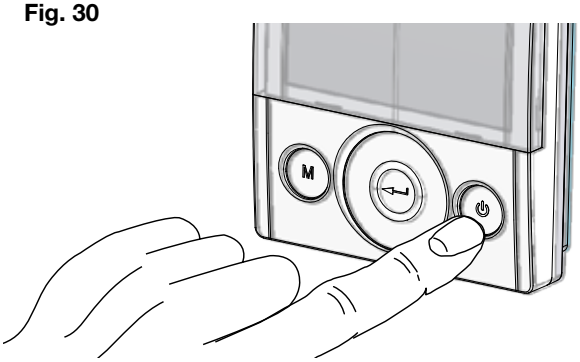

5. Press the ON/OFF and "M" Menu keys at the same time to access the **TECHNICAL MENU**.

Fig. 31

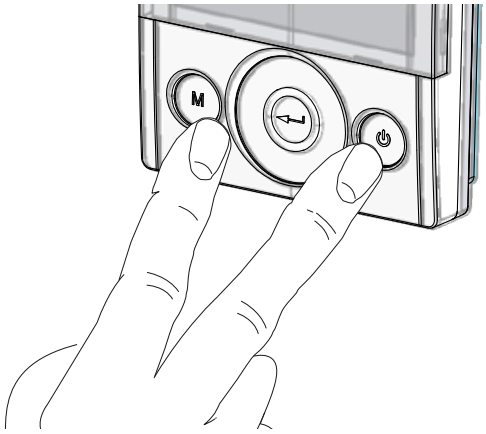

6. Use the ***TOUCH PAD*** to select the installer menu .

Press the Enter key to confirm

Select the "**V**" symbol and confirm

The message V1 flashes;

Perform the setting of the fan V1;

access the menu by pressing enter, the display shows:

Fig. 32

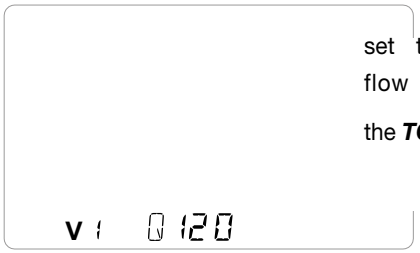

set the nominal design flow rate (m^3/h) using the ***TOUCH PAD*** .

Press the Enter key to confirm

Change the voltage value relative to the fan speed using the ***TOUCH PAD*** until the differential pressure gauge displays a value equal to the value of the objective pressure drop (Pascal) shown on the display.

Fig. 33

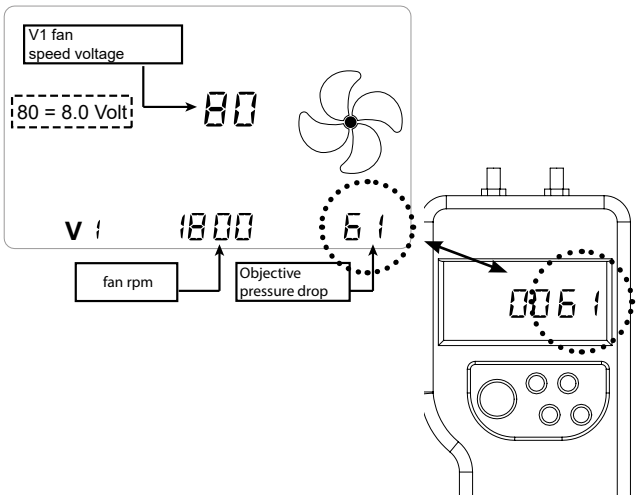

Press the Enter key to confirm

Before going on to set the fan V2, you must disconnect the differential pressure gauge from connections P1 and P2 and put the rubber caps back in place.

Installation instructions RHR-CF

Now proceed with connection of the differential pressure switch to connections P3 and P4

Fig. 34

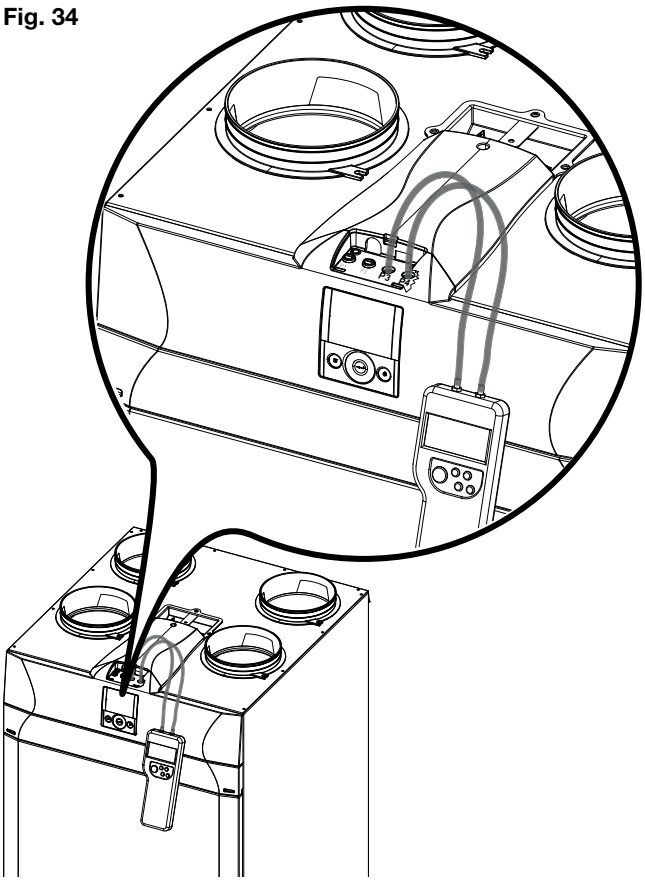

" V1 " currently flashes on the control display;

use the **TOUCH PAD** to select fan " **V2** " and

confirm by pressing enter.

Carry out the procedure described above for V1 also for fan V2.

When fan V2 has been set as well, go back to the

main screen by pressing "M" M 3 times.

Disconnect the differential pressure gauge and put the rubber caps and the cover of the front panel back in place.

14.3 Right side configuration

1. Use a screwdriver to remove the front panel cover.

Fig. 35

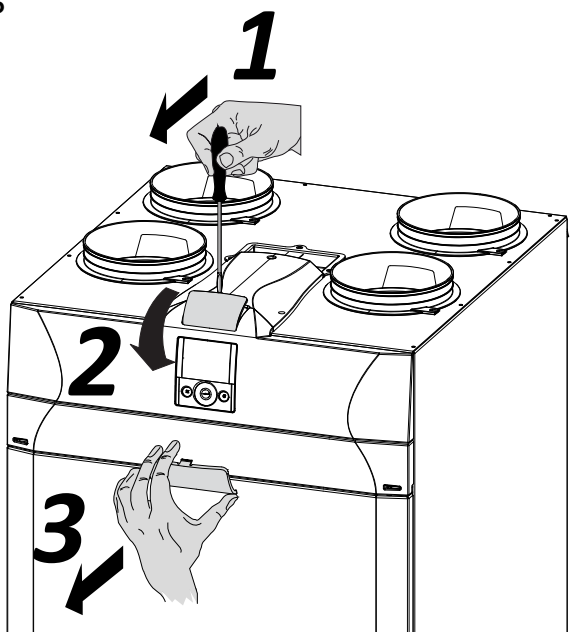

2. Connect the differential pressure gauge to connections P3 and P4.

Fig. 36

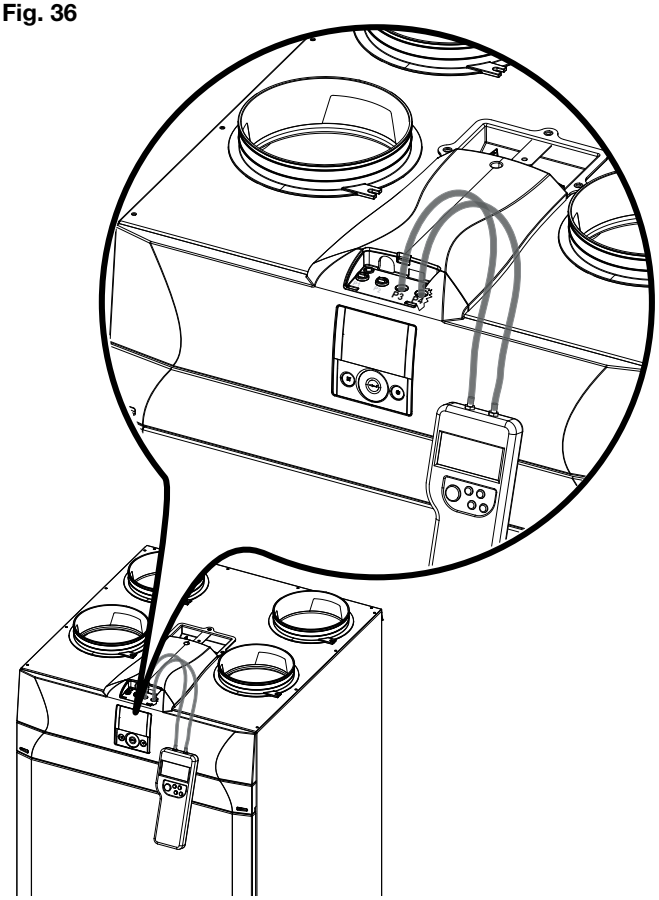

Installation instructions RHR-CF

3. Turn on the appliance at the ON/OFF key on the display.

Fig. 37

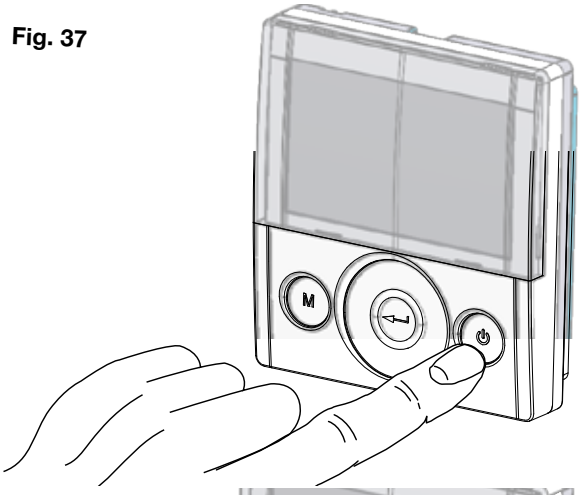

Fig. 38

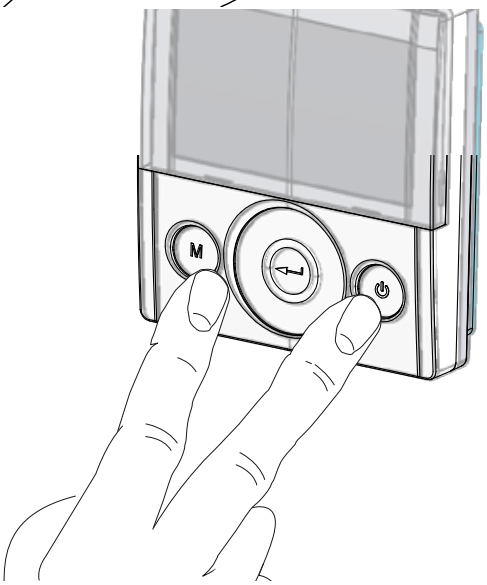

4. Press the ON/OFF and "M" Menu keys at the same time to access the **TECHNICAL MENU**.

5. Use the ***TOUCH PAD*** to select the installer menu .

Press the Enter key to confirm

Select the "**V**" symbol and confirm

The message V1 flashes;

Perform the setting of the fan V1;

Access the menu by pressing enter, the display shows:

Fig. 39

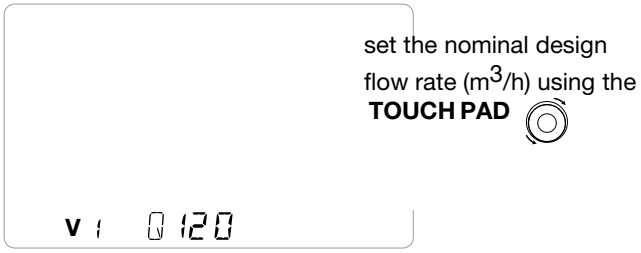

Press the Enter key to confirm

Change the voltage value relative to the fan speed using the **TOUCH PAD** until the differential pressure gauge displays a value equal to the value of the objective pressure drop (Pascal) shown on the display.

Fig. 40

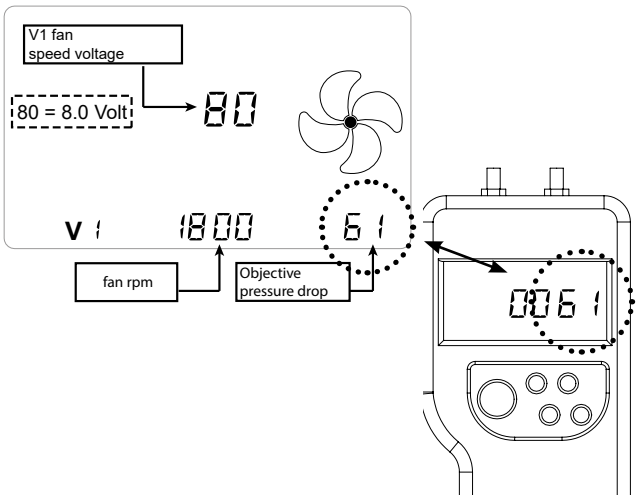

Press the Enter key to confirm

Before going on to set the fan V2, you must dis-connect the differential pressure gauge from connections P3 and P4 and put the rubber caps back in place.

Installation instructions RHR-CF

Now proceed with connection of the differential pressure switch to connections P1 and P2

Fig. 41

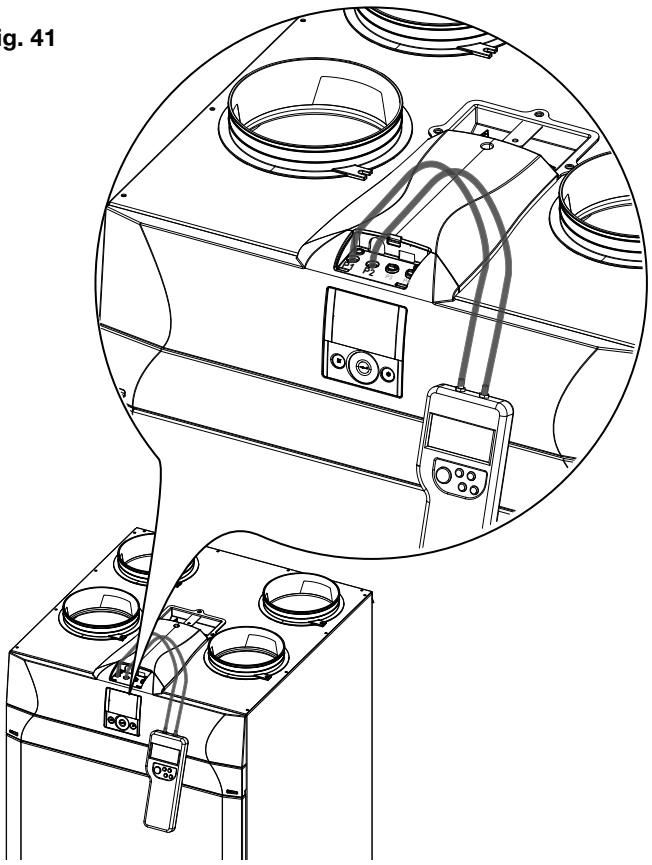

" V1 " currently flashes on the control display;

use the ***TOUCH PAD*** to select fan " **V2** " and confirm by pressing enter.

Carry out the procedure described above for V1 also for fan V2.

When fan V2 has been set as well, go back to the main screen by pressing "M" M 3 times.

Disconnect the differential pressure gauge and put the rubber caps and the cover of the front panel back in place.

14.4 Automatic calibration

ONLY WITH AUTOMATIC FLOW RATE CONTROL SYSTEM INSTALLED

1. Turn on the appliance by pressing the ON/OFF key on the display.

Fig. 42

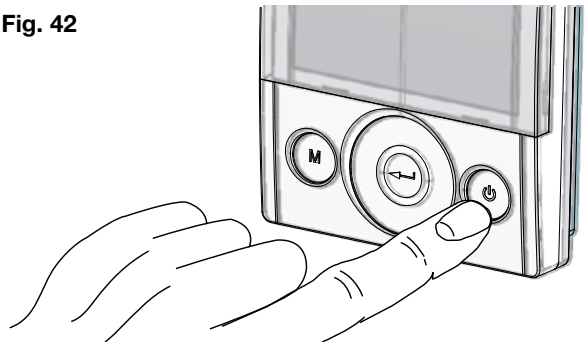

2. Press the ON/OFF and "M" Menu keys at the same time to access the **TECHNICAL MENU**.

Fig. 43

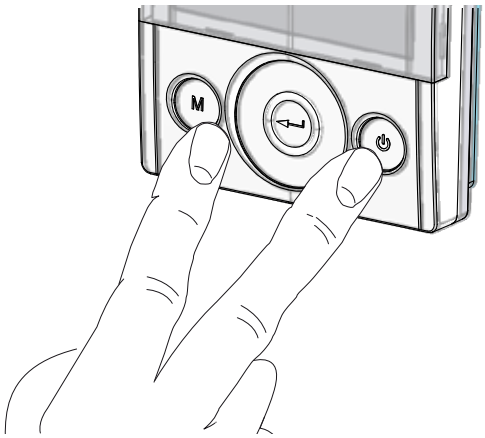

3. Use the **TOUCH PAD** to select the installer menu .

Press the Enter key to confirm

Select the "**V**" symbol and confirm

The message V1 flashes;

Perform the setting of the fan V1;

access the menu by pressing enter, the display shows:

Fig. 44

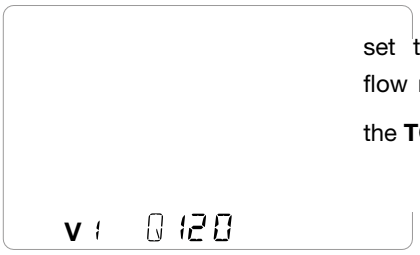

set the nominal design flow rate (m^3/h) using the **TOUCH PAD** +.

Press the Enter key to confirm

Installation instructions RHR-CF

4. The display will show:

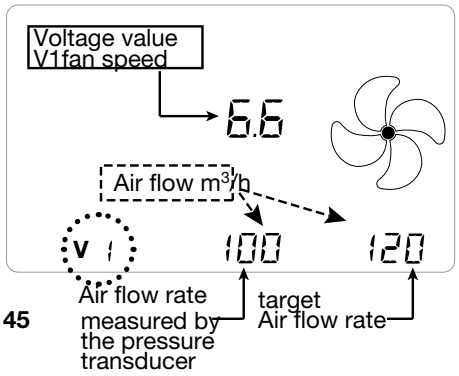

Fig. 45

Wait for the automatic calibration system to align the value measured by the transducer to the target value.

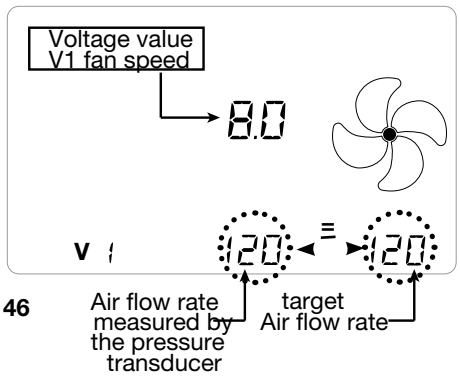

Fig. 46

5. Once fan V1 is calibrated, the system automatically starts calibrating fan V2.
The display with show:

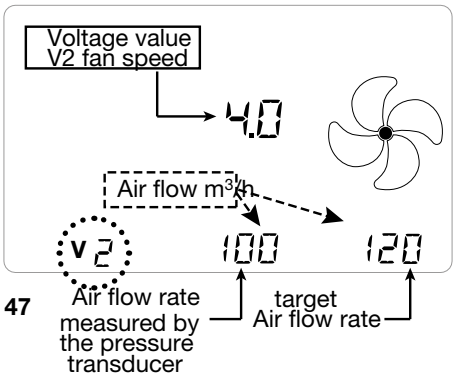

Fig. 47

Wait for the automatic calibration system to align the value measured by the transducer to the target value. Once fan V2 is calibrated,
the system automatically goes back to the main screen of the technical menu (symbol "**V**" flashes).

NOTE: with pressure transducer mounted, the MENU "**PAr**" will show a parameter called "**Sprc**"; this parameter is the imbalance of the return flow rate compared to the supply flow rate.

It can be altered with a range from +20 to -20 (%).

Example: if the parameter set is +10, the return is 10% less than the supply flow rate.

WARNING!: In cases where one fan cannot be run at the target flow rate, message "Out of Range"is temporarily displayed.

Then, the system steps to next extraction fan balancing or ends the flow rates setting procedure.

When "Out of Range" is displayed, last flow rate blown by fan just before the message is the one set by the system, which is the flow rate as close as possible to target.

14.5 Setting the clock and day of the week

1. Turn on the appliance at the ON/OFF key on the display.

Fig. 48

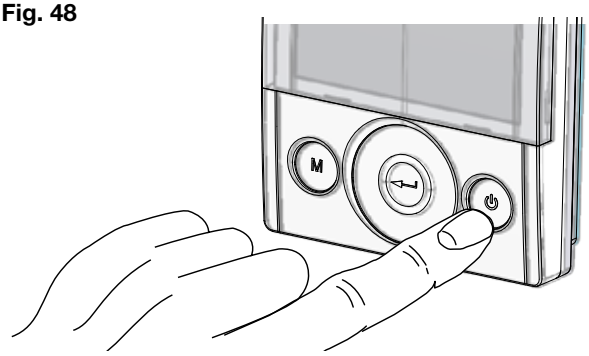

2. Press the ON/OFF and "M" Menu keys at the same time to access the **TECHNICAL MENU**.

Fig. 49

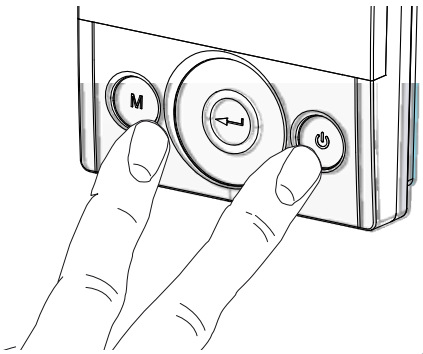

3. Use the ***TOUCH PAD*** to select the "**clock**" icon; " " starts to blink.
Press "**enter**" to confirm .
Use the ***TOUCH PAD*** to set the current hour. Press "**enter**" to confirm.

Use the ***TOUCH PAD*** to set the current minutes.

Installation instructions RHR-CF

Press "**enter**" to confirm.

Use the ***TOUCH PAD*** to set the current day. Press "**enter**" toconfirm.

Fig. 50

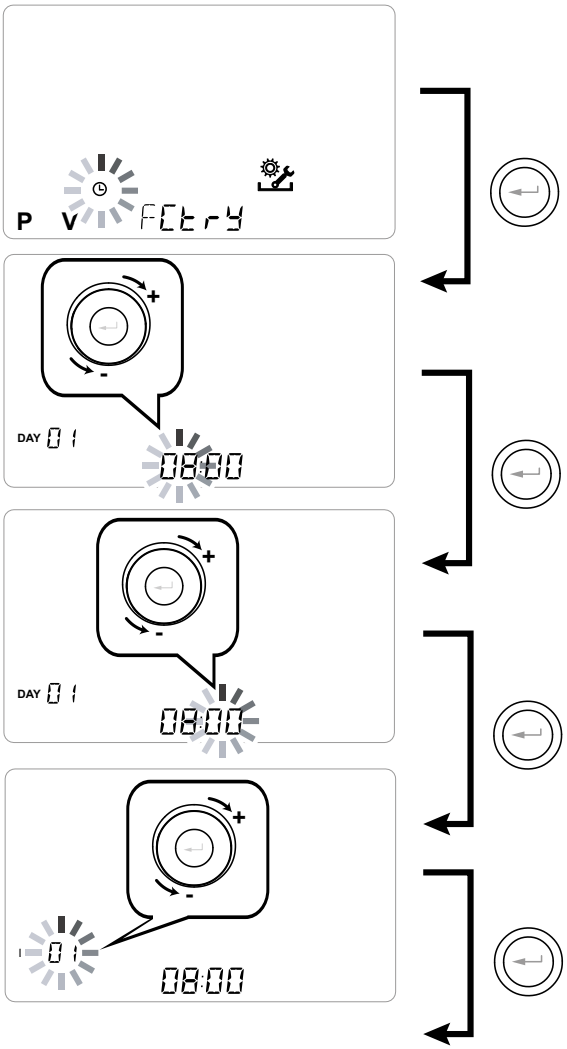

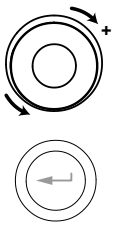

Use the **TOUCH PAD** to increase or decrease the value.

Use the Confirm button to confirm and move to the next setting.

Set the day of the week as follows:

day 1 = Monday , day 2 = Tuesday,
day 3 = Wednesday, ... day 7 = Sunday

15. Setting of the weekly programme

There is a choice of 8 weekly programmes: 4 preset programmes and 4 free programmes that can be modified at will.

15.1 Selection of the preset weekly programmes: Programmes P1-P2-P3-P4

1. Turn on the appliance at the ON/OFF key.
2. Press the ON/OFF and "M" Menu keys at the same time.

Fig. 51

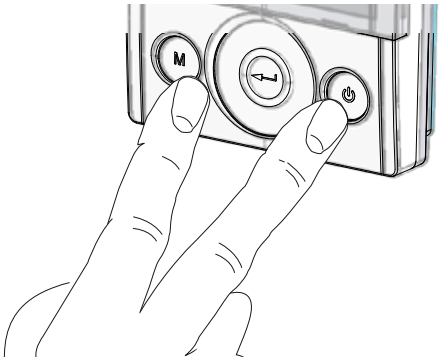

3. Use the ***TOUCH PAD*** to select the installer menu .
Press the Enter key to confirm .
4. Select the "**P**" symbol and confirm .
Now choose the program to be set from P1 - P2 -P3 and P4 (see the schedules on the next page).

Fig. 52

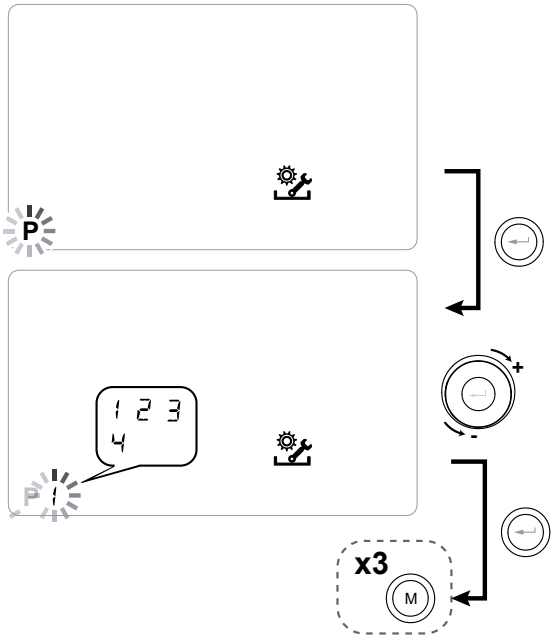

5. Press "M" three times to return to the main screen.

Installation instructions RHR-CF

15.2 Tables of settings for the preset weekly programmes

P1 - Weekly program, family with children, both parents work away from home during the day.

DAY	Monday - Friday																							
HOUR	0 – 1	1 – 2	2 – 3	3 – 4	4 – 5	5 – 6	6 – 7	7 – 8	8 – 9	9 – 10	10 – 11	11 – 12	12 – 13	13 – 14	14 – 15	15 – 16	16 – 17	17 – 18	18 – 19	19 – 20	20 - 21	21 - 22	22 - 23	23 - 24
SPEED																								
45%																								
70%																								
100%																								

DAY	Saturday - Sunday																							
HOUR	0 – 1	1 – 2	2 – 3	3 – 4	4 – 5	5 – 6	6 – 7	7 – 8	8 – 9	9 – 10	10 – 11	11 – 12	12 – 13	13 – 14	14 – 15	15 – 16	16 – 17	17 – 18	18 – 19	19 – 20	20 - 21	21 - 22	22 - 23	23 - 24
SPEED																								
45%																								
70%																								
100%																								

P2 - Weekly programme, family with steady presence at home during the day.

DAY	Monday - Sunday																							
HOUR	0 – 1	1 – 2	2 – 3	3 – 4	4 – 5	5 – 6	6 – 7	7 – 8	8 – 9	9 – 10	10 – 11	11 – 12	12 – 13	13 – 14	14 – 15	15 – 16	16 – 17	17 – 18	18 – 19	19 – 20	20 - 21	21 - 22	22 - 23	23 - 24
SPEED																								
45%																								
70%																								
100%																								

P3 - Weekly programme, working family who comes home for lunch.

DAY	Monday - Friday																							
HOUR	0 – 1	1 – 2	2 – 3	3 – 4	4 – 5	5 – 6	6 – 7	7 – 8	8 – 9	9 – 10	10 – 11	11 – 12		12 – 13	13 – 14	14 – 15	15 – 16	16 – 17	17 – 18	18 – 19	19 – 20	20 - 21	21 - 22	22 - 24
SPEED																								
45%																								
70%																								
100%																								

DAY	Saturday - Sunday																							
HOUR	0 – 1	1 – 2	2 – 3	3 – 4	4 – 5	5 – 6	6 – 7	7 – 8	8 – 9	9 – 10	10 – 11	11 – 12	12 – 13	13 – 14	14 – 15	15 – 16	16 – 17	17 – 18	18 – 19	19 – 20	20 - 21	21 - 22	22 - 23	23 - 24
SPEED																								
45%																								
70%																								
100%																								

P4 - Weekly programme, office used from Monday to Friday.

DAY	Monday - Friday																							
HOUR	0 – 1	1 – 2	2 – 3	3 – 4	4 – 5	5 – 6	6 – 7	7 – 8	8 – 9	9 – 10	10 – 11	11 – 12	12 – 13	13 – 14	14 – 15	15 – 16	16 – 17	17 – 18	18 – 19	19 – 20	20 - 21	21 - 22	22 - 23	23 - 24
SPEED																								
45%																								
70%																								
100%																								

Installation instructions RHR-CF

15.3 Creation of the free weekly programmes Programmes P5-P6-P7-P8

It is possible to create 4 weekly programs at will, according to your habits and needs.

Proceed as follows:

1. Turn on the appliance at the ON/OFF key.
2. Press the ON/OFF and "M" Menu keys at the same time.
3. Use the ***TOUCH PAD*** to select the installer menu

Press ***enter*** to confirm .

4. Select the " **P** " symbol and confirm

Now select the first free programme to be created from among P5 - P6 - P7 or P8.

5. Once the programme number is defined, following scheduling should be done:

- define the day
- define fan speed at the first time step, which starts by default at 00:00.

Use the **TOUCH PAD** with the purpose to set 4 avail-able speeds plus Party Mode speed.

Blades are displayed into fan icon accordingly.

- define hour of first time step end
- repeat procedure for next time step
- maximum number of time steps is 8

6. After programming the first day, press "M" to move to the next day; it is possible to extend the programme created for the first day to the other days of the week (Xtend= extend):

Fig. 53

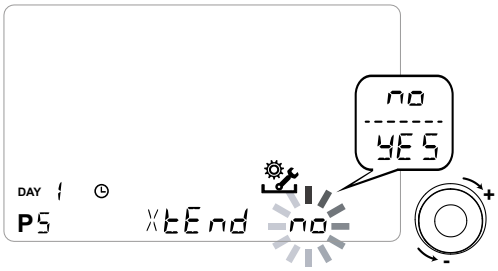

If you select "**YES**"the programme is automatically copied to the other days of the week; if instead you select "**no**", you can then use the **TOUCH PAD** to select a day and repeat the programming process.

PLEASE NOTE: the daily hourly programme is set by default to OFF.

Fig. 54

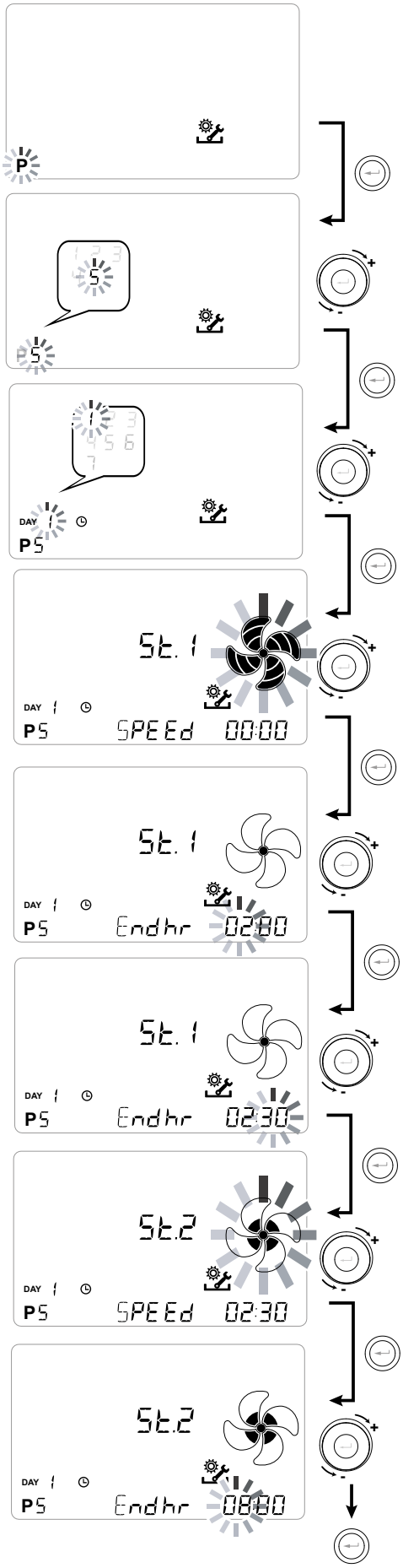

Installation instructions RHR-CF

15.4 Tables of settings for the free weekly programmes

IMPORTANT! complete the tables with the configuration of the programmes created.

P5

DAY	Monday - Friday																							
HOUR	0 – 1	1 – 2	2 – 3	3 – 4	4 – 5	5 – 6	6 – 7	7 – 8	8 – 9	9 – 10	10 – 11	11 – 12	12 – 13	13 – 14	14 – 15	15 – 16	16 – 17	17 – 18	18 – 19	19 – 20	20 - 21	21 - 22	22 - 23	23 - 24
SPEED																								
Low																								
Nominal																								

DAY	Saturday - Sunday																							
HOUR	0 – 1	1 – 2	2 – 3	3 – 4	4 – 5	5 – 6	6 – 7	7 – 8	8 – 9	9 – 10	10 – 11	11 – 12	12 – 13	13 – 14	14 – 15	15 – 16	16 – 17	17 – 18	18 – 19	19 – 20	20 - 21	21 - 22	22 - 23	23 - 24
SPEED																								
Low																								
Nominal																								

P6

DAY	Monday - Friday																							
HOUR	0 – 1	1 – 2	2 – 3	3 – 4	4 – 5	5 – 6	6 – 7	7 – 8	8 – 9	9 – 10	10 – 11	11 – 12	12 – 13	13 – 14	14 – 15	15 – 16	16 – 17	17 – 18	18 – 19	19 – 20	20 - 21	21 - 22	22 - 23	23 - 24
SPEED																								
Low																								
Nominal																								

DAY	Saturday - Sunday																							
HOUR	0 – 1	1 – 2	2 – 3	3 – 4	4 – 5	5 – 6	6 – 7	7 – 8	8 – 9	9 – 10	10 – 11	11 – 12	12 – 13	13 – 14	14 – 15	15 – 16	16 – 17	17 – 18	18 – 19	19 – 20	20 - 21	21 - 22	22 - 23	23 - 24
SPEED																								
Low																								
Nominal																								

P7

DAY	Monday - Friday																							
HOUR	0 – 1	1 – 2	2 – 3	3 – 4	4 – 5	5 – 6	6 – 7	7 – 8	8 – 9	9 – 10	10 – 11	11 – 12	12 – 13	13 – 14	14 – 15	15 – 16	16 – 17	17 – 18	18 – 19	19 – 20	20 - 21	21 - 22	22 - 23	23 - 24
SPEED																								
Low																								
Nominal																								

DAY	Saturday - Sunday																							
HOUR	0 – 1	1 – 2	2 – 3	3 – 4	4 – 5	5 – 6	6 – 7	7 – 8	8 – 9	9 – 10	10 – 11	11 – 12	12 – 13	13 – 14	14 – 15	15 – 16	16 – 17	17 – 18	18 – 19	19 – 20	20 - 21	21 - 22	22 - 23	23 - 24
SPEED																								
Low																								
Nominal																								

P8

DAY	Monday - Friday																							
HOUR	0 – 1	1 – 2	2 – 3	3 – 4	4 – 5	5 – 6	6 – 7	7 – 8	8 – 9	9 – 10	10 – 11	11 – 12	12 – 13	13 – 14	14 – 15	15 – 16	16 – 17	17 – 18	18 – 19	19 – 20	20 - 21	21 - 22	22 - 23	23 - 24
SPEED																								
Low																								
Nominal																								

DAY	Saturday - Sunday																							
HOUR	0 – 1	1 – 2	2 – 3	3 – 4	4 – 5	5 – 6	6 – 7	7 – 8	8 – 9	9 – 10	10 – 11	11 – 12	12 – 13	13 – 14	14 – 15	15 – 16	16 – 17	17 – 18	18 – 19	19 – 20	20 - 21	21 - 22	22 - 23	23 - 24
SPEED																								
Low																								
Nominal																								

Installation instructions

RHR-CF

16. User operational procedures

16.1 Start and stop the heat recovery unit

To turn the unit on, press the ON/OFF power key as shown in the figure to the right (Fig. 55).

Fig. 55

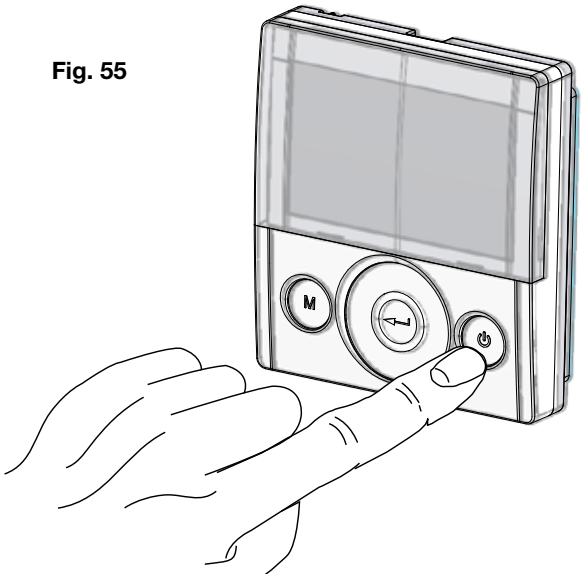

Fig. 56

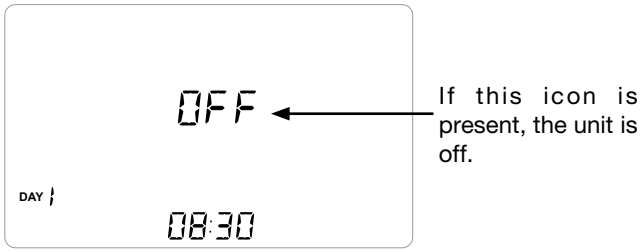

16.2 Selecting the operating mode on the T-EP controller

Press "M" to access the User Settings Menu (Fig. 57). The following options are available:

- Manual ventilation function;
- Preset ventilation functions;

PARTY;

HOLIDAY;

- AUTO Automatic mode; available for units connected with air quality sensor (humidity or CO^2);
  - Filter lifetime reset;
- Weekly programme activation;
- Current day and time setting

Fig. 57

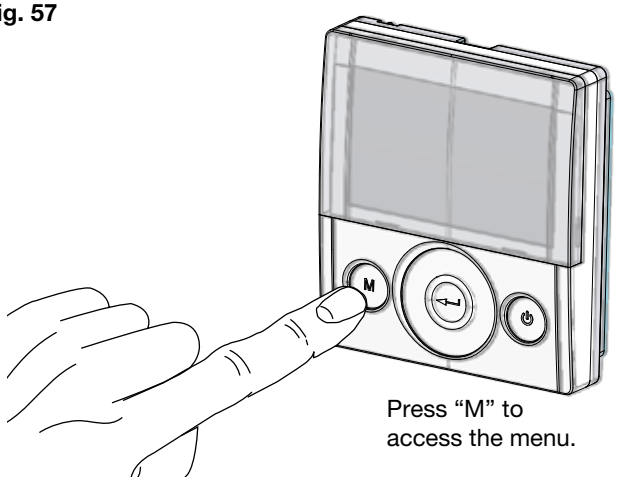

Use the ***TOUCH PAD*** to pass from one function to another.

To access the desired function, please press the confirmation button

Fig. 58

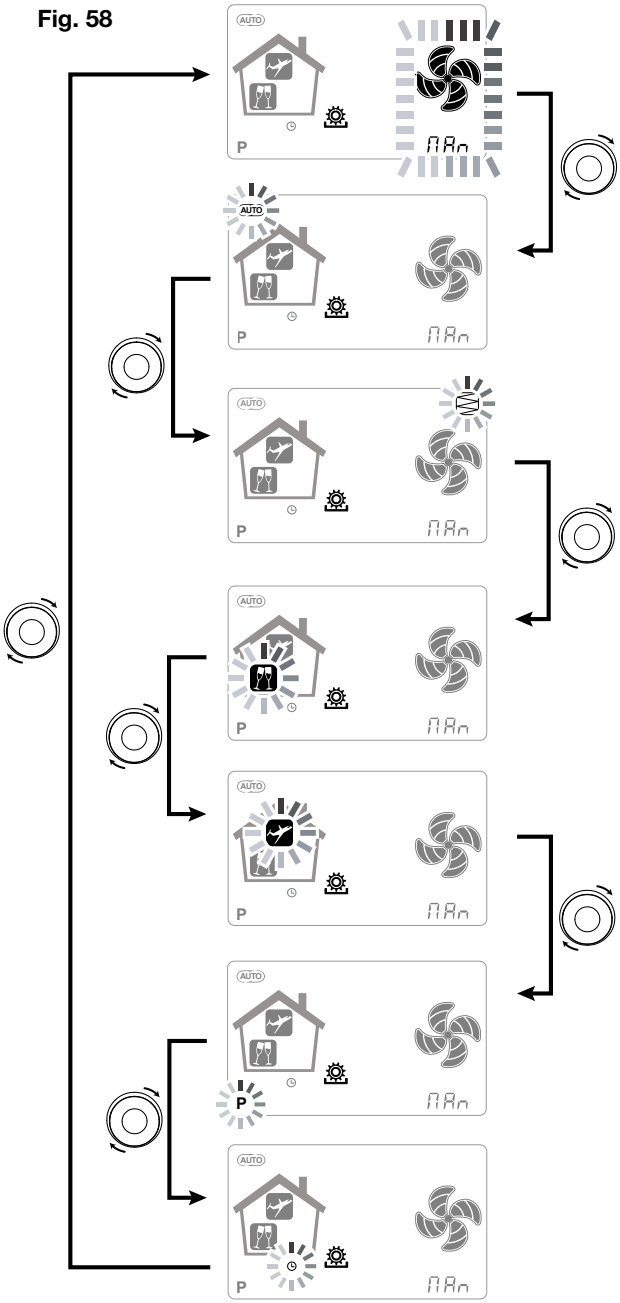

Installation instructions RHR-CF

16.3 Manual ventilation function

Press "M" and scroll with the **TOUCH PAD** until the "Manual ventilation" mode starts flashing.

Then press "Confirm"  .

Fig. 59

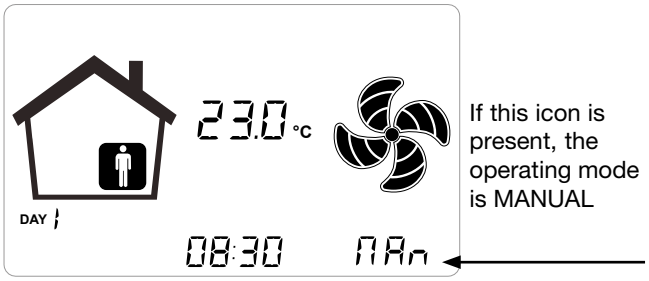

With the "Manual ventilation" mode enabled, the speed of the fan at the various points can be adjusted by scrolling with the **TOUCH PAD**. Rotating the key clockwise on the pad increases the speed of the fan while anticlockwise decreases the speed of the fan.

"Manual ventilation" mode at 100% is the standard operating mode, corresponding to the nominal air flow rates set by the installer upon initial configuration.

Fig. 60

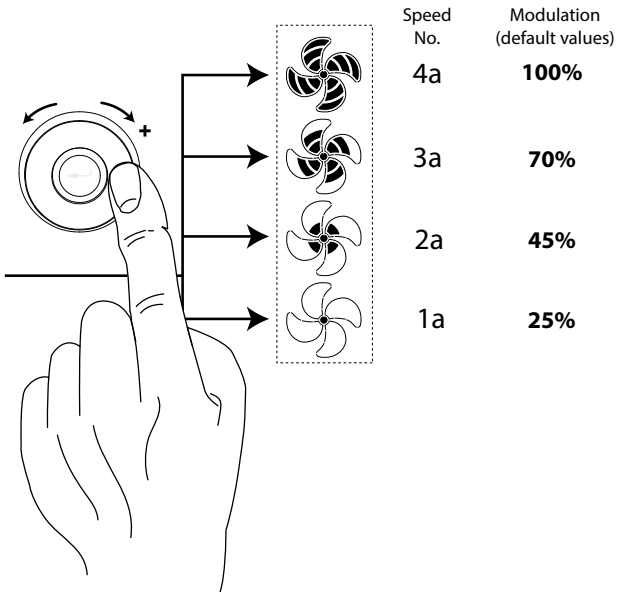

16.4 Automatic mode

Available for units equipped with air quality sensor (humidity or CO2).

Press "M" and scroll with the **TOUCH PAD** until the AUTOMATIC mode starts flashing.

Then press "Confirm"  .

If this icon is present, the operating mode is AUTOMATIC

Fig. 61

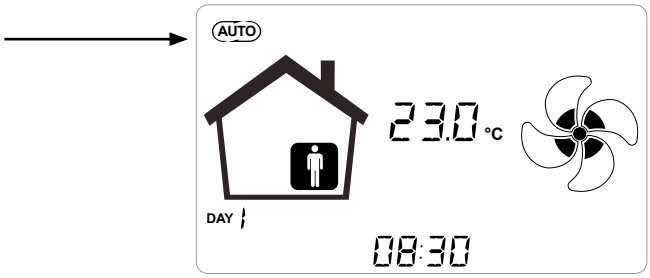

The advanced centralised control systems are equipped with an RH% humidity sensor or else an external CO_2 sensor.

When **"Automatic Mode"** is enabled, fan speed is controlled by an automatic control cycle relative to internal instantaneous humidity and CO_2 variations.

16.5 Automatic mode with humidity sensor

The fan speed is set according to the interval relating to the ambient relative humidity detected by the sensor.

If the ambient humidity is compatible with the ambient comfort (typically between 25% and 50%), then a special control for air exchange is not necessary and the user can control the speed of the fans as in Manual Mode.

If the ambient humidity temporarily goes beyond the ambient comfort range, then an automatic variable flow control mode is engaged, for tracking an ambient humidity target value.

The target value is continuously calculated by the system as a daily average of the ambient humidity. This way the system reacts automatically to restore as much as possible the comfort conditions lost due to an extraordinary event, such as steam production caused by a hot shower or a pot while cooking.

In automatic variable flow control mode, the user can manually change the speed of the fans as required at any time. The automatic mode will be restored at the next significant ambient humidity variation. If, however, the poor comfort conditions persist, then it will mean that the low or high humidity is not due to extraordinary and temporary events, but depends on harsh weather conditions, such as winter frost or extreme heat.

Installation instructions RHR-CF

In these extreme conditions, the automatic mode sets the fan at minimum speed, in order to isolate as much as possible the internal environment from the external one and at the same time preserve the ambient comfort.

Low humidity emergency speed can be modified by in-staller by the mean of "**ErHs**", included into "**Par**" menu.

Wet climate ventilation mode is effective in case a cool-ing system with dehumidification is in place. In this case it is advisable to enable the function by operating on variable **HrHis**.

Fig. 62

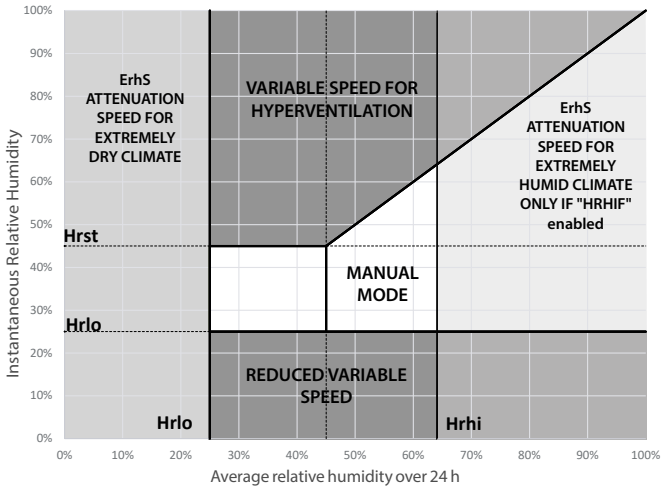

16.6 Automatic mode with CO_2 sensor

The variable flow rate control based on the CO2 detected acts according to fixed parameters, though they can be modified by the installer, according to the following diagram:

Fig. 63

Flow management logic chart in relation to PPM CO_2

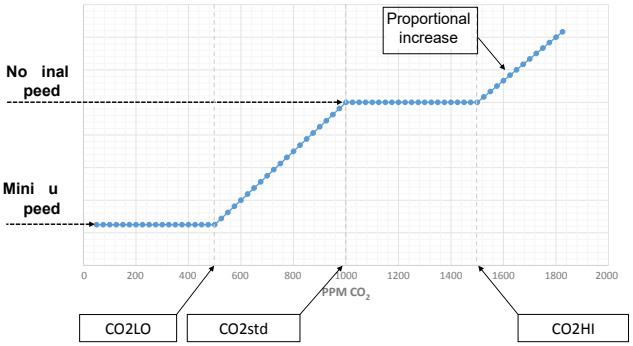

16.7 Party mode

Press "M" and scroll with the **TOUCH PAD** until "**PARTY**" mode starts flashing.

Then press "Confirm" .

Fig. 64

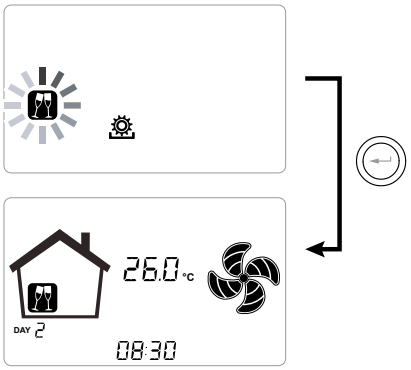

If "**PARTY**" mode is enabled, fan speed is increased respect to the nominal speed.

"**PARTY**" mode is a timed function (default 3 hours).

The speed percentage of the "**PARTY**" mode is set as a parameter by the installer according to the customisation requested by the user, starting from the standard value of 130% compared to the nominal speed.

The duration of the "**PARTY**" mode can be changed by accessing the TECHNICAL Menu and **Par** sub menu via the "**Tbst**" parameter.

Installation instructions RHR-CF

16.8 Holiday mode

Press “M” and scroll with the **TOUCH PAD** until the *“**HOLIDAY**”* mode starts flashing.

Then press “Confirm” .

Fig. 65

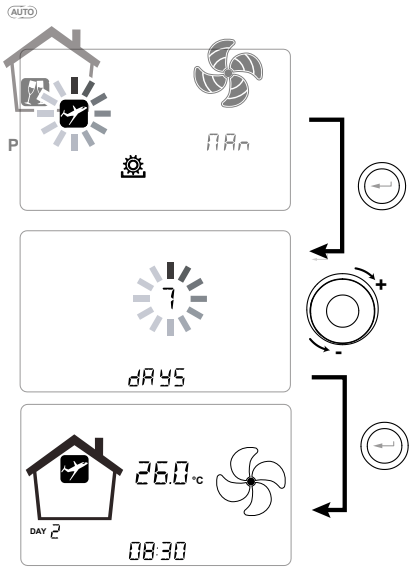

“**HOLIDAY**” mode speed is the minimum.

Once “**HOLIDAY**” mode is enabled, control device asks for the period duration in days.

In case where duration is unknown, the user can enter nothing in the field of duration.

This way permanent “**HOLIDAY**” Mode is enabled.

In any case, “**HOLIDAY**” mode can be stopped by changing mode within User Menu.

PLEASE NOTE: the operating parameters of “**HOLIDAY**” mode can be changed by the installer (Parameters Menu section).

16.9 Activation of weekly programme

Press “M” ; scroll with the **TOUCH PAD** until the function “ **P** ” starts flashing and confirm by pressing “Confirm” .

When confirmed, the preset program is activated.

The display shows the chosen program number when the unit is “put into service”.

Fig. 66

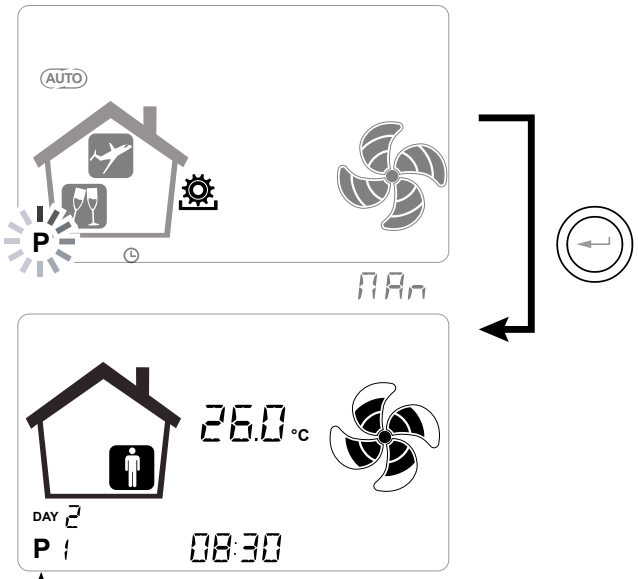

If this icon is present, it means that a scheduled program is active.

The number identifies the growth program chosen when commissioning the unit.

The activation of the weekly programme does not preclude the user's ability to manually change the speed of the fans.

In fact, despite a programme in time slots is active, the user can still operate on the TOUCH PAD, increasing or decreasing the speed as desired.

The manual override applied to the weekly programme will remain operational until the next time slot, when automatic programming will become active again.

16.10 Setting the clock and the day of the week

Press "**M**"; scroll with the wheel until the "**clock**" icon starts flashing " ".

Then press "**Confirm**" .
Scroll with the wheel to set the hour.

Press "**Confirm**" and scroll again to set the minutes.

Press "**Confirm**" and scroll to set the current date.

Fig. 67

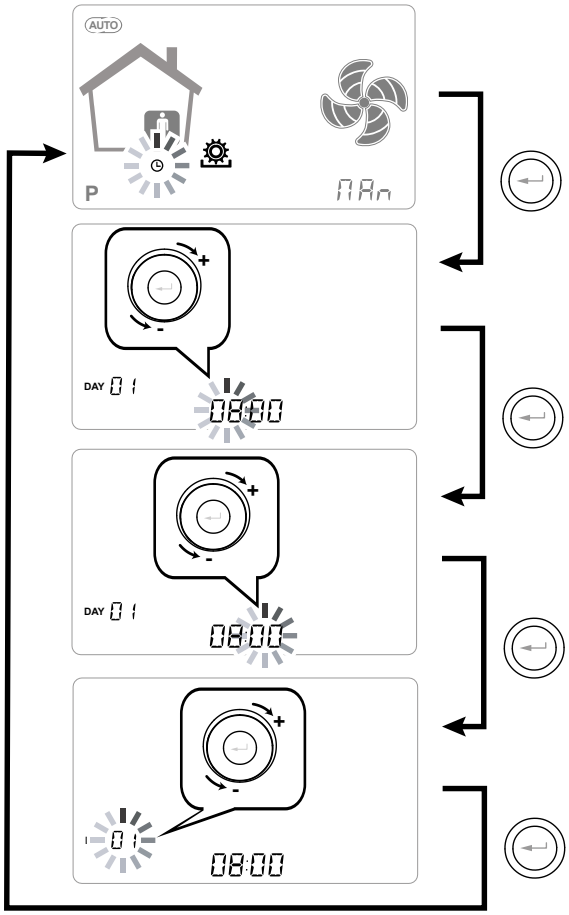

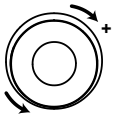

Use the **TOUCH PAD** to increase or decrease the value.

Use the Confirm button to confirm and move to the next setting.

Set the day of the week as follows:

day 1 = Monday, day 2 = Tuesday,
day 3 = Wednesday, ... day 7 = Sunday

17. Supplementary functions

17.1 Booster mode

This is enabled by a remote control normally located in a bathroom or kitchen.
The power board of the centralised unit receives the pulse from the outside and enables the "Booster Mode" In this case the "Boost" icon appears as a notification on the screen of the unit's control panel.

Fig. 68

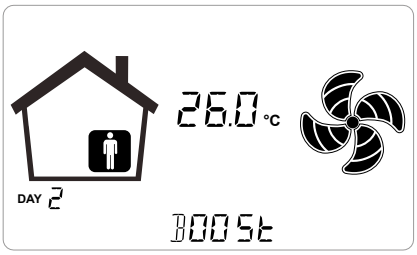

Like for "**Party Mode**","**Booster Mode**" determines an increase in the timed speed respect to the nominal speed.

The percentage of the duration and of the speed increase of the ventilation unit can be configured by the installer upon a specific request of the user.

The standard duration is 3 hours (default) and the standard percentage is 130% beyond the nominal speed.

Before standard duration ends, user can stop **Booster** mode by repeating the command on the remote switch.

17.2 Fireplace function

If the unit is interfaced with an negative pressure ambient pressure switch and is set in the DIP-SWITCH configuration recommended in presence of a natural draught chimney, the unit is automatically turned off when the ignition of the fireplace causes negative pressure in the room.

This occurs in order to prevent the ambient pressure induced by the action of the dual flow ventilation unit from counteracting the natural draught of the fireplace and releasing smoke into the room.

17.3 Boiler function

If the unit is interfaced with a remote switch and is set in the DIP-SWITCH configuration recommended in presence of an atmospheric boiler, the unit is forced into a strong imbalance supply mode in order to facilitate the ignition of the boiler.

The mode remains active as long as the switch stays in the activation position.

Installation instructions RHR-CF

17.4 Free cooling function

There can be climatic conditions during the year that make it impractical to recover heat from extracted air for treating fresh air from outside.

For example, in mid-season, the outdoor air temperature can be lower than the indoor air temperature due to solar and internal factors, and this tends to occur when the indoor temperature is between 22 and 26°C so there is more of a need for cooling than for heating. In this case it is advisable to use free-cooling, i.e. fresh air from outdoors to cool for free, bypassing the heat recovery unit. Conversely, it is possible to use fresh air for heating during a change in season, in which case the process is known as free-heating.

The units are equipped with a bypass damper system that totally disables use of the recovery heat exchanger to permit free-cooling (or free-heating).

The system is controlled on the basis of a logic subject to the feedback of the integrated temperature probes.

The logic is as follows:

The indoor air temperature setpoints of the air conditioning system in winter and summer are defined in order to maintain conditions of comfort:

$t_{heating} \longmapsto$ normally $t_{heating} = 20°C$

$t_{cooling} \longmapsto$ normally $t_{cooling} = 26°C$

(temperatures can be modified by the installer according to the actual settings of the plant)

The following are also defined:
t_i = indoor air temperature (return air)
EAT = External Air Temperature

FREE-COOLING CONDITION

EAT $t_{heating}$ and simultaneously t_i EAT

FREE-HEATING CONDITION

EAT < $t_{cooling}$ and simultaneously t_i<EAT

Fig. 69 Free cooling graph

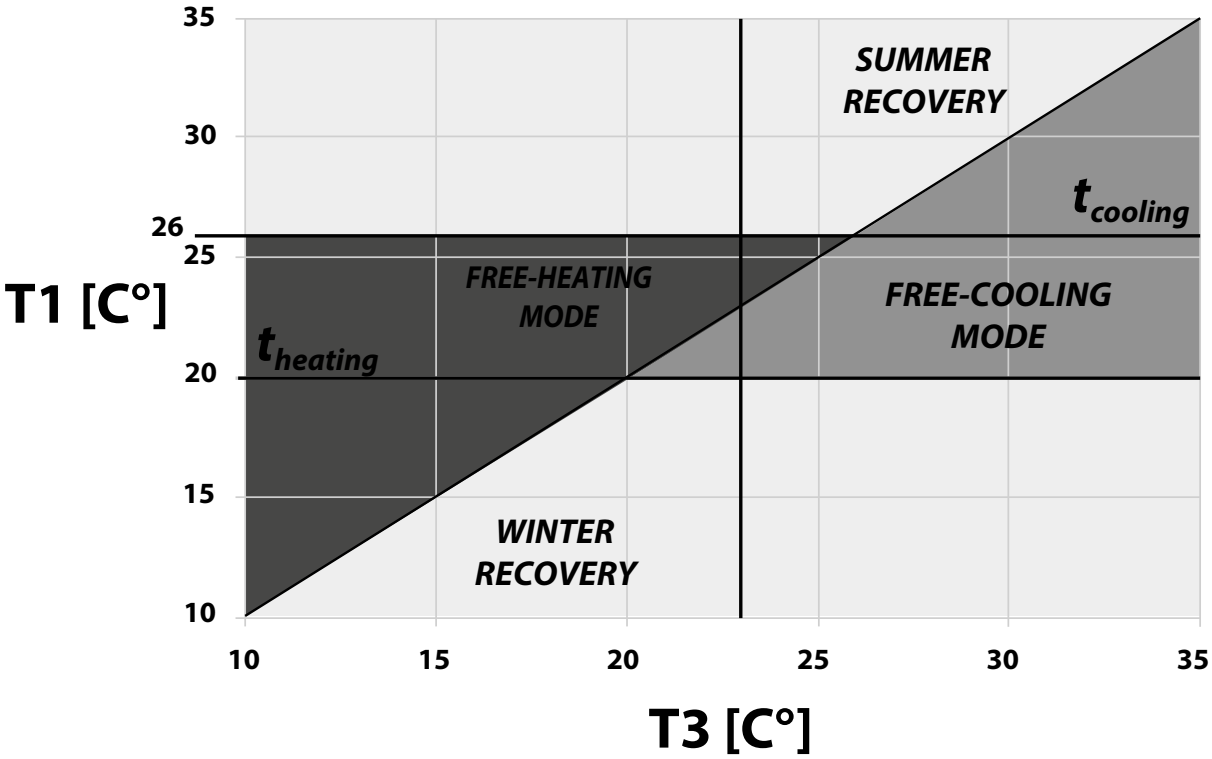

Installation instructions RHR-CF

17.5 Pre-treatment function with geothermal coil

If a hydronic circuit with geothermal or ground water probes is available, it is possible to feed a hydronic pre-treatment coil, which can be used in both seasons.

A dedicated function for using the geothermal source is available.

In winter, the coil valve is controlled to carry out the antifreeze function. It opens if the exhaust tempera-ture falls below 3°C and closes above 6°C. Depending on the available water temperatures, the coil must be sized to ensure the antifreeze function.

In summer, the coil valve is controlled to carry out the pre-cooling function.
It opens when the outside temperature rises above 24°C.

There is a provisional closure mode if the intake temperature is too cold, to ensure the ambient com-fort conditions and a permanent closure when the outside climate starts returning to winter conditions.

Pre-cooling, or geothermal water free-cooling, is compatible with ventilation free-cooling and extends the periods of use.

17.6 Summer mode

Summer mode is a strong air change cycle, which is enabled when "Flush" parameter is switched on into "Par Menu".

NOTE: Summer mode is performed 4 times a day, except when it would imply high ventilation heat loss.

Fig. 70

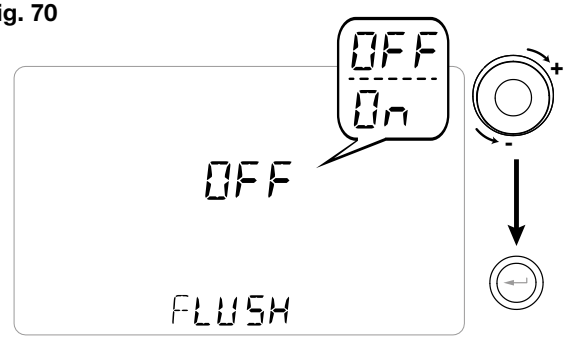

17.7 Functions block screen "Func"

From the PAr Menu you can access the "Func" screen.

Using the TOUCH PAD you can select the function to be inhibited from being used by the USER.

The functions that can be inhibited are:

- Party
- Holiday
- Manual
- AUTO
- Machine Shutdown ("OFF")
- Clock
- Weekly Programs

Press "***Enter***" to enable the inhibition of a specific function, which is confirmed by the activation of the padlock icon.

Press "M" 3 times to go back to the Main Screen.

In the User Menu, the functions inhibited by the screen "**Func**" can no longer be selected.

Alongside there is a function block example (Party mode).

Fig. 71

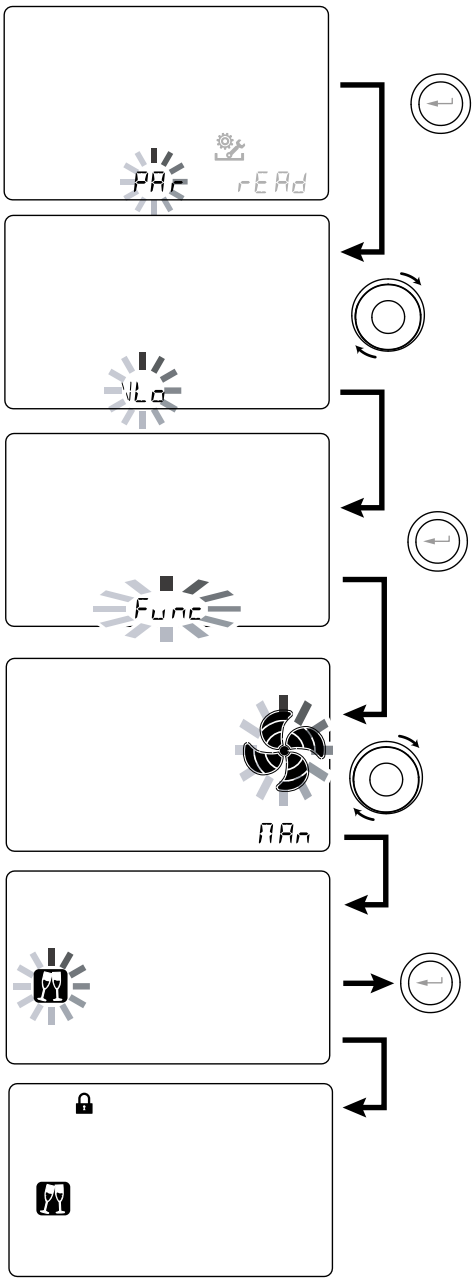

Installation instructions RHR-CF

18. Antifreeze function

18.1 With integrated modulating electric resistance

In the event that the unit is installed in a cold climate (winter outside design temperature below -5°C), we recommend the use of versions with an electric anti-freeze resistance on the external air intake circuit (MODELS RHR-CF-V - ER/ EL/ PRO ER/ PRO EL).

The electric resistances available for units preheat the air entering the heat exchanger in order to avoid freezing of the humid air extracted and discharged by the heat exchanger in the opposite circuit.

In fact, when the outside air falls below the critical temperature, which can lead to freezing during extraction, the electric heater is activated and provides the minimum thermal power such that the temperature of the extracted air is kept above freezing conditions (set point 4°C).

The electric resistances are selected in order to maintain the minimum conditions of indoor comfort at outdoor temperatures down to -10°C, and in order to avoid the degenerative formation of ice at discharge down to -15°C outside.

The electric resistance is fitted with a safety thermostat that turns off the unit in case of uncontrolled heating. In case the resistance does not start up, instead, the unit will turn off if the intake air temperature falls below 5°C.

Activation of the resistance as a result of the anti-freeze function is represented by the icon

Fig. 72

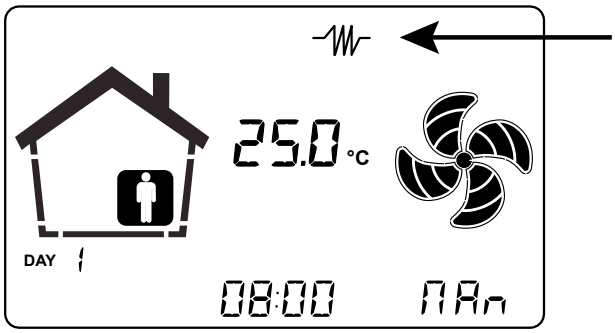

The operating logics and alarm signals are shown in the table at the end of the chapter on ANTI-FREEZE FUNCTIONS.

18.2 With external modulating electric heater

For units not equipped with integrated electric resistance, a duct modulating electric resistance is available as a preheating accessory.

The use of the external modulating ducted electric heater allows to obtain the best anti-freeze solution at the expense of the best energy saving because the operation of the preheating element is aimed at keeping the inlet temperature of the ventilation unit above 0°C.
When using the external electric heater, please carefully follow the installation and configuration instructions given in the accessory kit.

To enable the operation of the external modulating electric heater, DIP SWITCHES 2 and 9 must be enabled.

18.3 Without electric resistance

In case the unit is without an electric antifreeze resistance, the unit has preventive operation logic which, below -5°C, automatically sets running of the intake fan at minimum for 10 minutes every hour.
Also, in case the temperature falls below -10° C, the unit stops automatically and an alert appears on the display of the controller: " **FROST** ".

When the Frost alarm is triggered, the unit switches OFF and restarts automatically when the critical climatic condition disappears. The Frost alert remains until the next time the unit is switched off and back on.

18.4 With preheating hydronic coil or ON/OFF resistance

As an alternative to the use of versions with the electric preheating resistance, a hot water or ON/OFF resistance pre-treatment coil can be used to perform the antifreeze function, mounted on the outdoor air inlet duct.

The hydronic coil or ON/OFF resistance is not available as an accessory. However if the configuration DIP SWITCHES 2 and 3 are activated, the power board is capable of managing the opening of an on/off valve or an ON/OFF electric resistance stage for the preheating function.

The valve opening and closing logic is shown in the table below.

The opening of the water supply valve of the coil is or of the ON/OFF electric resistance stage is represented on the display with the icon

Installation instructions RHR-CF

18.5 Antifreeze protective circuit chart

			External air t1	*Supply air t2*	*Exhaust air t4*
UNITS EQUIPPED WITH ANTIFREEZE SYSTEM	With modulating electric heater	Switching on of anti-freeze electric heater Setpoint t4 = 4°C	<-3°C	-	<4°C
		Switching off of anti-freeze electric heater	>0°C	-	>5°C
	DIP 3 == ON With hydronic coil equipped with 2-way valve or on/off electric heater	Valve opening or electric heater switching on	<-1°C	-	-
		Valve closing or electric heater switching off	4°C	-	-
	DIP 9 == ON With external modulating electric heater	Switching off of anti-freeze electric heater Setpoint t1 = 1.5°C	<-1°C	-	-
		Switching off of anti-freeze electric heater	>4°C	-	-
	In case of preheating that does not provide sufficient heat flow (althou-gh the preheating is at full load, t4 does not stay above 3.5°C)	Reduction of the speed of both fans with integral proportional law in pursuit of the target temperature (t4 integrated resistance/t1 external resistance). Electric heater malfunction alarm	-	-	<3,5°C
		Unit switching off with "Frost" alarm	-	-	<1°C
			<-20°C	-	
		Unit switching off with "Frost only with external preheating" alarm (DIP 3 aut DIP 9 =ON)	<-5°C	-	
UNITS WITHOUT ANTIFREEZE SYSTEM)	-	Defrost cycles: The input fan is brought to the mini-mum speed for 10 min per hour.	<-5°C	-	-
		Unit switching off with "Frost" alarm	<-10°C	-	-
ALL UNITS	-	Low inlet air temperature alarm t2	-	<10°C	-
		Unit switching off with "Frost" alarm	-	<5°C	-

- With Frost alarm, the unit goes to OFF and automatically restarts when the critical weather condition disappears. Frost warning remains until the next time the machine is switched off and on.
- In case of faulty temperature probe t1 and integrated electric heater, the heater continues to work based only on t4. In case instead of external electric heater or hydronic coil the preheating is interrupted and the Frost alarm for t4<1°C is triggered.
- In case of preheating fault or faulty temperature probe t4 for integrated electric heater, the logic of defrosting cycles by unbalancing the flow rates takes over.
- With integrated electric heater, the minimum speed allowed is speed 2 with a default modulation percentage of 45%.
- Modes of slowing down or unbalancing the fans for anti-freeze reasons take priority over any other flow modulation logic.
- To limit the peaks, it is possible to correlate the maximum power modulation that the electric heater can provide to the ratio between the flow rate actually regulated and the maximum flow rate of the machine. Request assistance.
- It is possible to adopt an external modulating electric heater control logic based on the extraction temperature target as in the case of the integrated electric heater. Request assistance.

Installation instructions RHR-CF

19. Menus

19.1 Technical menu

1. Turn on the appliance at the ON/OFF key.

Fig. 73

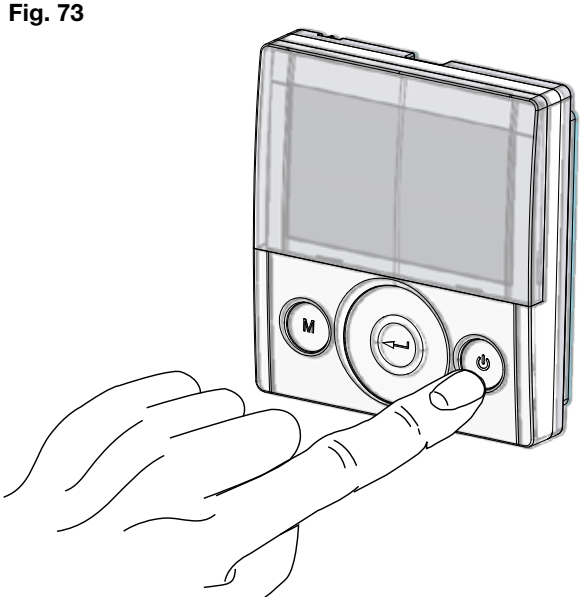

2. Press the ON/OFF and “M” Menu keys at the same time.

Fig. 74

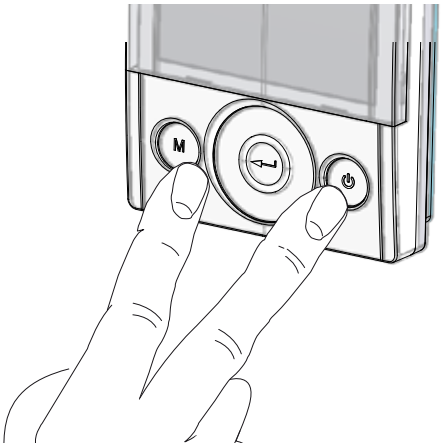

3. The symbol flashes on the display;

Use the **TOUCH PAD** to choose the desired function between:

- Installer menu (initial setting menu);
- “PAr” parameters;
- read menu;

Press the Enter key to confirm .

19.2 Installer menu

The symbol flashes on the display when the installer menu is opened. Use the **TOUCH PAD** to choose the desired function between:

- day and time setting ;
- initial setting/configuration of fans “**V**”(see sec-tion “COMMISSIONING”);
- Selection/Setting of the chosen weekly program “**P**”(see section “COMMISSIONING”);
- FCtry (FACTORY) menu;

Press the Enter key to confirm .

Fig. 75

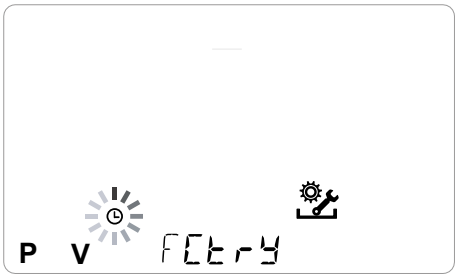

NOTE: the FACTORY (“FCtry”) menu is for the exclusive use of the manufacturer.

19.3 Password-protected menu

Press the“**M**” button once to return to parameter selection; to exit the menu, press the “**M**” button 3 times.

Installation instructions RHR-CF

Fig. 76

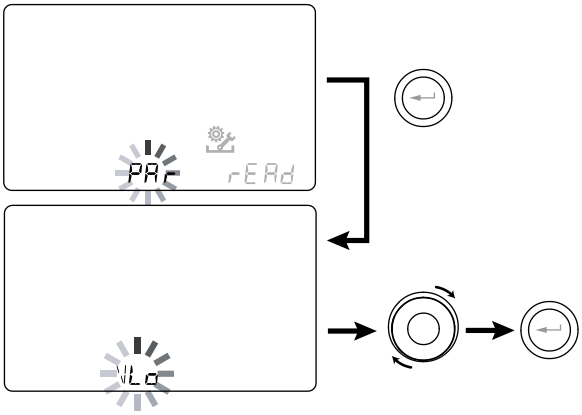

19.4 Parameters menu

This menu allows you to modify the operating pa-rameters of the appliance. With the controller "**ON**",press "**M**" and On/Off simultaneously for 3 seconds. Select the "**PAr**"menu using the TOUCH PAD and confirm by pressing "**Enter**". Select the parameter to be modified by using the TOUCH PAD and confirm by pressing **Enter**". Once the parameter is selected, the value will be displayed. The value can be modified using the TOUCH PAD. Press the"**M**" button once to return to parameter selection; to exit the menu, press the "**M**" button 3 times.

"PAr"	*DESCRIPTION*	*RANGE*	*DEFAULT*
CO2hi	Maximum CO2 level *	1500 - 2000 ppm	1500
CO2lo	Minimum CO2 level *	400 - 600 ppm	500
CO2st	Nominal CO2 level *	900 - 1100 ppm	1000
CO2Sr	Full-scale CO2 *	2000 - 30000 ppm	2000
VLO	Minimum control voltage in calibration	-10% - +10%	See table 2
VHI	Maximum control voltage	-10% - +10%	See table 2
nLO	Minimum speed in operation	-10% - +10%	See table 2
nHI	Maximum speed	-10% - +10%	See table 2
Pstd	Percentage of standard modulation of nominal speed	100% - 110%	100%
Pbst	Percentage of boost/party modulation	110% - 130%	130%
PnGt	Percentage of night modulation	45% - 100%	70%
Pmed	Percentage of intermediate modulation	35% - 70%	45%
Phol	Percentage of minimum - holiday modulation	0 - 35%	25%
Tbst	Boost/Party Time	60 - 240 min	180
TCOOL	Cooling setpoint temperature for freeheating management	10 - 30°C	26
THEAT	Heating setpoint temperature for freecooling management	10 - 30°C	20
Test	Summer season transition temperature for pre-cooling management geothermal coil	10 - 30°C	18
Tinv	Winter season transition temperature for antifreeze management geothermal coil	10 - 30°C	24
SPrc	Percentage imbalance between flow rates	-20% - +20%	0%
RHnSP	Number of samples to calculate dynamic humidity setpoint	1 - 96	96 (15 min)
Flife	Filter service life	30 - 400 days	180 days
HrLO	Relative humidity for Minimum Humidity mode activation Relative humidity lower limit in the comfort range *	20 - 45	25
Hrst	Relative humidity upper limit in the comfort range *	40 - 50	45
HrHiF	Shows the HrHi parameter*	On - Off	Off
HrHi	Relative humidity for Maximum Humidity mode activation*	60 - 80	65
FLUSH	Summer Mode activation	On - Off	OFF
ErHs	Speed of Low humidity	1 - 4 speeds	2 speed
Func	FUNCTIONS blocking operation (see dedicated paragraph)	—	—

* Available only if the functions feature air quality sensors

Installation instructions

RHR-CF

Model	nMAX (rpm)	nMIN (rpm)	Vmax (Volt)	Vmin (Volt)
RHR-CF-V 170 **-170 EL** **-170 ER**	3450	588	9	4
RHR-CF-V 270 **-270 EL** **-270 ER**	2470	220	8	3.5
RHR-CF-V 360 **-360 EL** **-360 ER**	2850	220	7	4
RHR-CF-V 460 **-460 EL** **-460 ER**	3200	434	7	3.22
RHR-CF-V 600 **-600 EL** **-600 ER**	3000	570	8	3,37

Model	nMAX (rpm)	nMIN (rpm)	Vmax (Volt)	Vmin (Volt)
RHR-CF-V 180 PRO **-180 PRO EL** **-180 PRO ER**	3570	588	9.58	4.22
RHR-CF-V 280 PRO **-280 PRO EL** **-280 PRO ER**	2470	220	8	4.5
RHR-CF-V 370 PRO **-370 PRO EL** **-370 PRO ER**	3150	220	10	4
RHR-CF-V 460 PRO **-460 PRO EL** **-460 PRO ER**	3200	434	7	3.22
RHR-CF-V 600 PRO **-600 PRO EL** **-600 PRO ER**	3000	570	8	3,37

Installation instructions RHR-CF

19.5 Read menu

Fig. 77

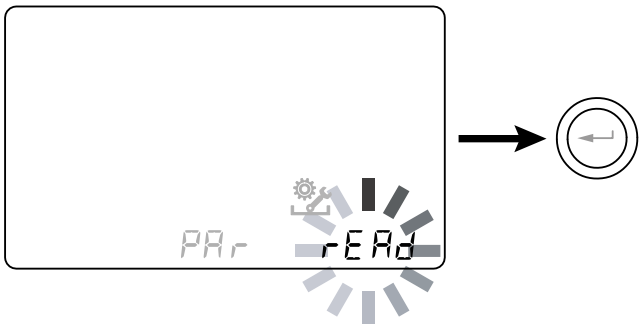

Fig. 78

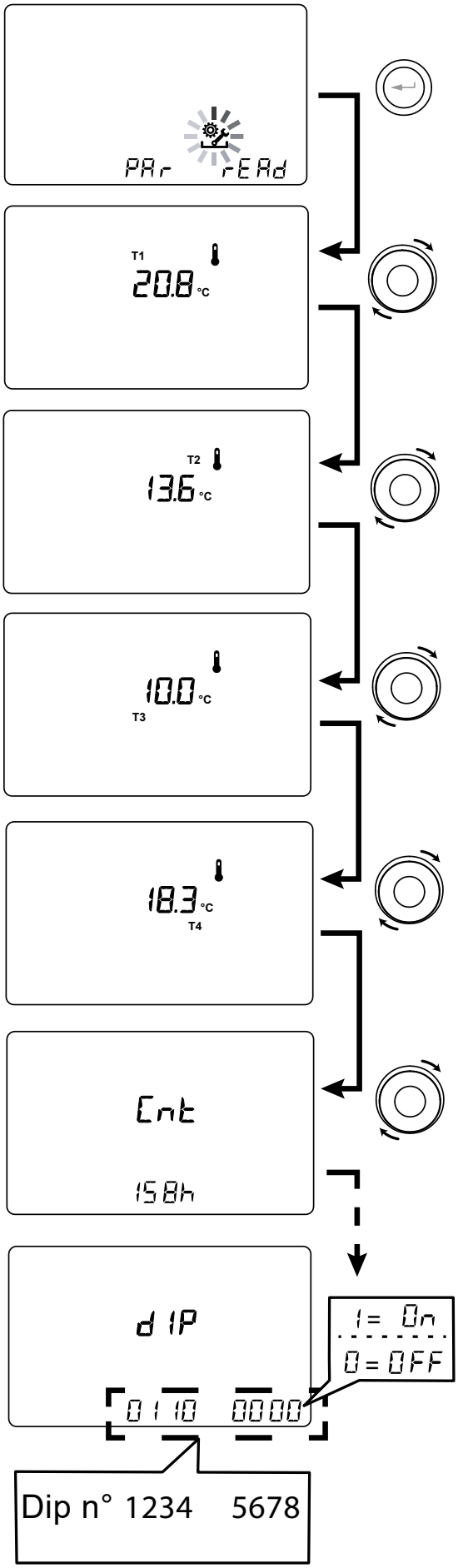

This menu allows you to read some operating parameters of the appliance.

With the controller "**ON**", press "**M**" and On/Off simultaneously for 3 seconds.

Select the "**rEAd**" menu using the TOUCH PAD and confirm by pressing "**Enter**".

Select the parameter to be read using the TOUCH PAD. Once you have selected the parameter, the value will appear on the display.

Press the"**M**" button once to return to parameter selection; to exit the menu, press the "**M**" button 3 times.

	DESCRIPTION
T1	value of external air temperature probe T1
T2	value of intake air temperature probe T2
T3	value of stale extracted air temperature probe T3
T4	value of exhaust air temperature probe T4
RD1	Fan voltage
RD2	fan rpm
RD3	Air flow rate automatically controlled by fans (*)
RD4	Temperature report
RH	detected humidity value (*)
RHs	detected dynamic humidity set point value (*)
CO2	value of CO_2 detected (*)
	Preheating resistance power output (*)
Cnt	Number of operating hours of the appliance (fan hours rpm 0)
DIP	Configuration dip switch power board
	Time remaining until filter replacement (in days)

* Available only if the functions feature air quality sensors

Installation instructions

RHR-CF

19.6 Read menu reports

The table showing the reports that may occur during the operation of the machine follows.

Read menu screen	Type of signal	Description
Remaining time **----**		FAN max. rpm exceeded.. Filters earlier than countdown completion.. To turn the display off, you must turn the unit off and on again.

19.7 Alarms

Below is a table for troubleshooting the faults that may occur during operation of the machine.

Type of Signal	Description of Fault	Notes/Solution	DL3 Blinking LED
	General Alarm.	Present in case of any fault	-
	FAN voltage/speed limits exceeded.	It is recommended to enter the **Read** Menu to check the FAN operating parameters and identify which FAN is not working	4
	Faulty temperature probe	The faulty probe code appears next to the "thermometer" icon. In the **Read** Menu the faulty sensor no longer provides any reading.	2
	Faulty humidity/CO2 probe	It is recommended to enter the **Read** Menu to check the probe data and identify which probe is faulty.	6
	Filter replacement.	Replace the filters of the unit.	1
	Electric defrost resistance fault	Check the resistance reset thermostat; Check the electrical connections; It is recommended to enter the **Read** Menu to check the probe data and identify which probe is faulty	3
FROST	Antifreeze Alarm	REFER TO ANTIFREEZE PROTECTIVE CIRCUIT TABLE The FROST alarm is reset automatically. In order to report the failure, the FROST string continues to flash in the hours field until technical support is provided.	/
	T-EP Controller Error	Check the electrical connections between the controller and the power board of the machine.	7
	Problem with the differential pressure transmitter module	-	5
	Timekeeper Alarm	Buffer coil dead: the unit may have lost its starting configurations. Contact Support	-

Installation instructions RHR-CF

20. Maintenance

20.1 User maintenance

Servicing involving the user is limited to periodically replacing the filters. The filters must only be replaced when indicated on the controller display (icon).

The unit cannot be used without filters.

Always disconnect power before accessing the unit.

- Open the front panel;
- Remove the caps (A);
- Extract the filters and replace them (B).
- Put all the components back in the opposite order and reconnect power.

PLEASE NOTE: comply with the codes on the filters and the type of unit connection used (standard or right side).

Fig. 79

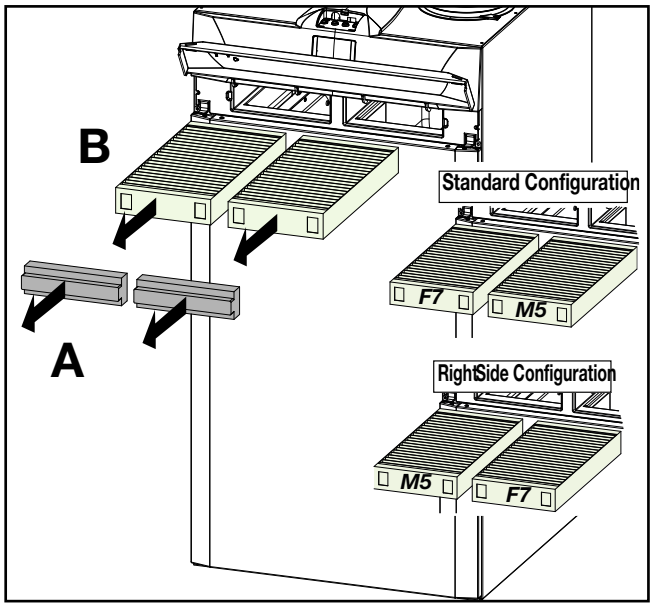

- Now it is possible to switch off the icon display.
- Go to the User Setting menu, press the "M" button.
- Use the ***TOUCH PAD*** to select the icon of filter activation .
- Press the confirm button .
- The timer to change the filters has been reset .

In case the filters need to be changed before the timer deadline, it is possible to reset the countdown " " at any moments by following the described procedure.

Installation instructions RHR-CF

20.2 Installer maintenance

The following maintenance interventions must only be carried out by the installer or by qualified personnel:

- Inspect the filters and clean them if necessary;
- Inspect the heat exchanger and clean it if necessary;
- Inspect the fans and clean them if necessary;
- Check the condensate drain once every two years.

The following paragraph gives a short description of the maintenance interventions.

PLEASE NOTE: If maintenance is not carried out regularly, the ventilation system might not work properly.

20.3 Check the heat exchanger

Check the heat exchanger once every two years.

Always disconnect power before accessing the unit.

• Open the front panel

• Unscrew the front panel and remove it.

Fig. 80

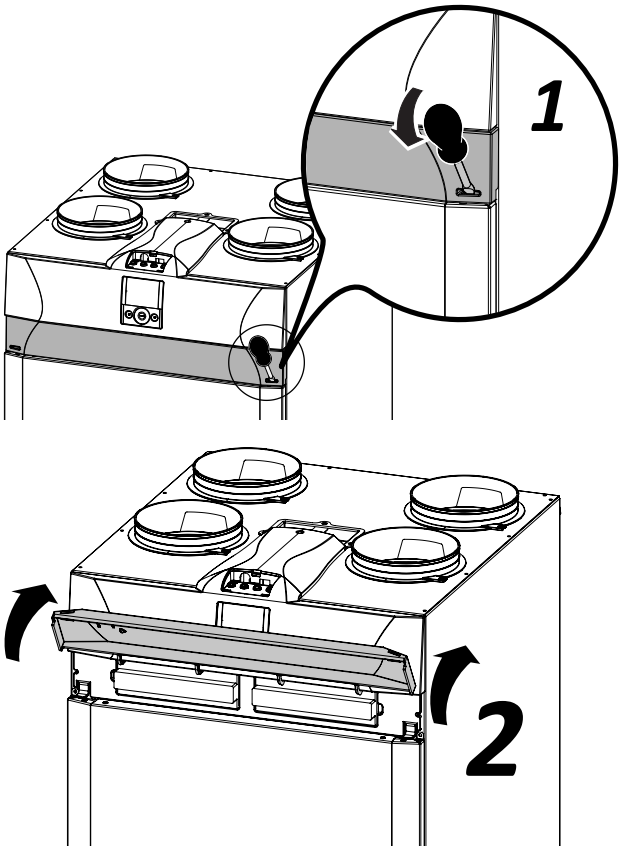

Fig. 81

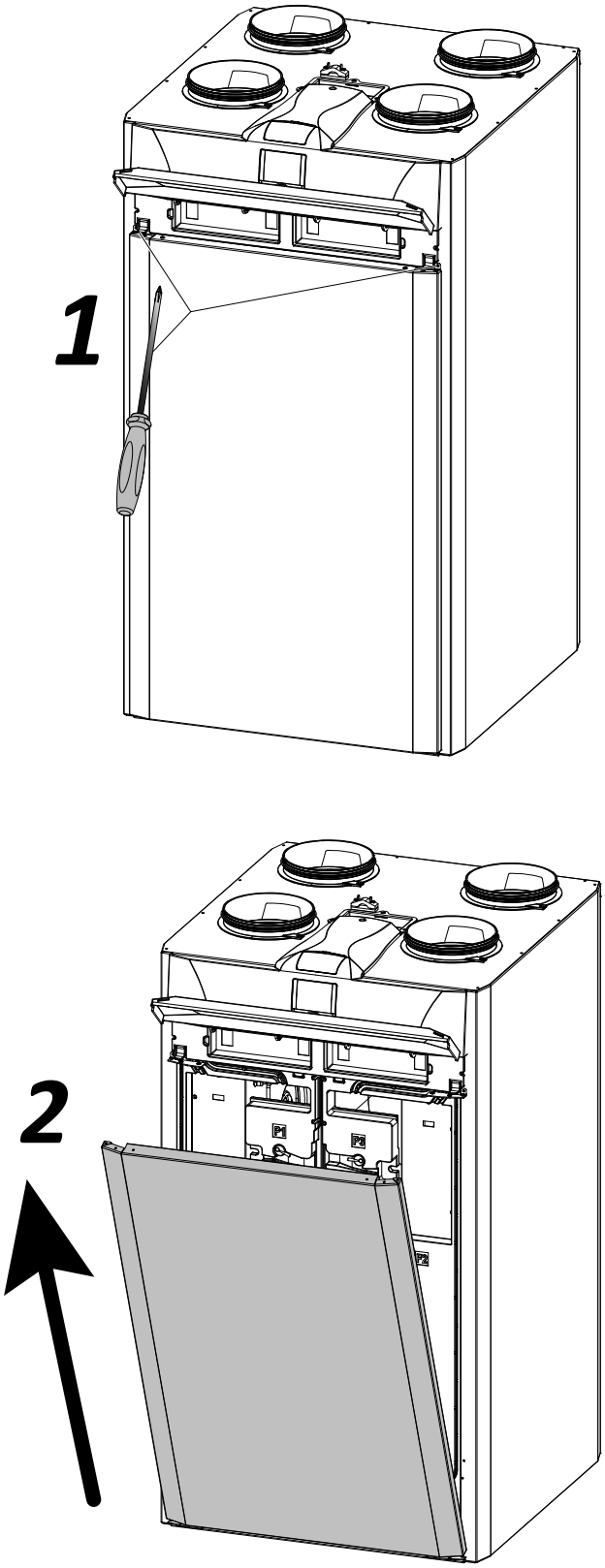

Installation instructions RHR-CF

- Pull the band (A) to remove the heat exchanger.

Fig. 82

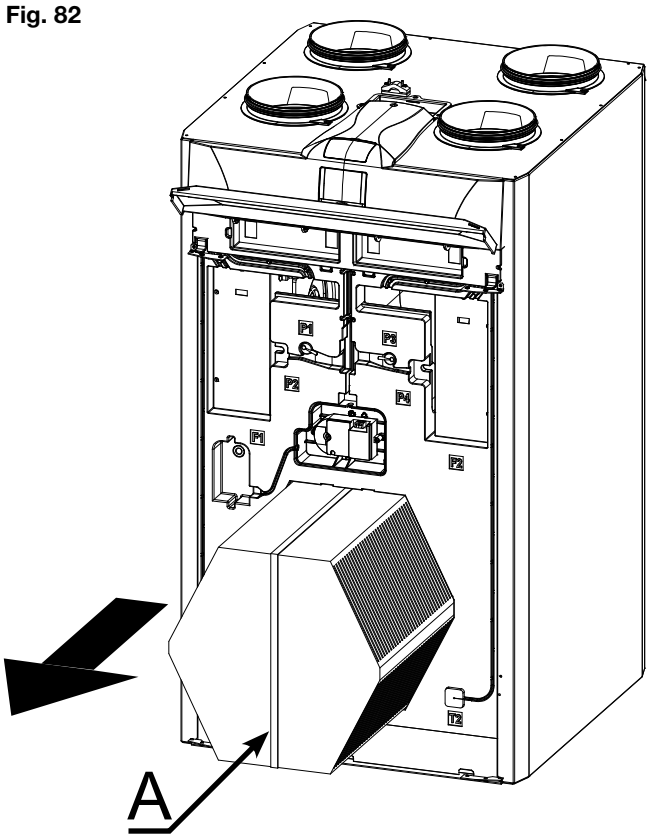

ATTENTION! The heat exchanger may contain residual water.

- Inspect the condition of the heat exchanger and clean it if necessary:

– Use a soft brush to clean the fins.
– Use a vacuum cleaner or compressor (not high pressure) to remove filth and dust.

IMPORTANT! Always clean in the opposite di-rection of the air flow.

– If no more operation is necessary, refit all the components in the opposite order and reconnect power.

20.4 Check the fans

Check the fans once every two years.

Always disconnect power before accessing the unit.

- Unscrew the front panel and remove it as shown in the chapter on maintenance of the heat exchanger.
- Remove the black panels (B) in front of the fans.
- Extract the fans (C) paying attention to the electric cables.

PLEASE NOTE: to extract the fans, you must completely remove the electric cables and their clamped fixing devices.

Fig. 83

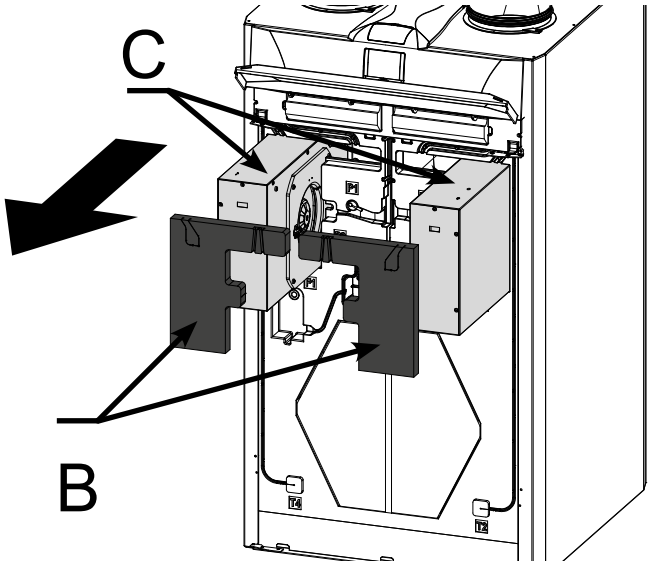

– Clean the fans with a soft brush for the fan blades and use a vacuum cleaner (D) to remove dust.

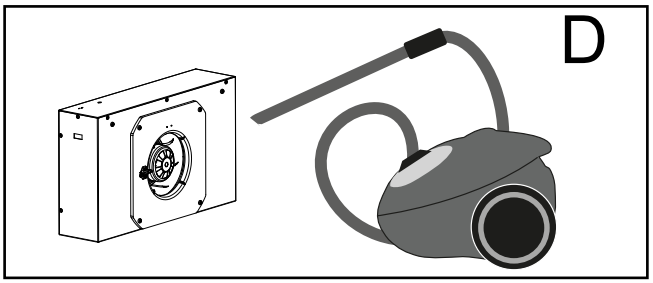

ATTENTION! Do not damage the fan blades.

– If no more operation is necessary, refit all the components in the opposite order and reconnect power.

Installation instructions

21. Wiring diagrams

Machine in standard configuration

KEY

M1-M2 = EC motor
M3 = Primary damper motor
M4 = Secondary damper motor
B1 = Outdoor air temperature probe
B2 = Supply air temperature probe
B3 = Extracted stale air temperature probe
B4 = Exhaust air temperature probe
B5-B6 = Electric resistance safety thermostats
B7 = Humidity sensor
B8 = Pressure transducer
F4 = Electric resistance safety fuse
R1 = Electric Resistance
1 = Relay

BK = Black
BN = Brown
BU = Blue
OG = Orange
RD = Red
WH = White
GNYE = Green/Yellow
YE = Yellow

Installation instructions

RHR-CF

21.1 SE-0545 - RHR-CF-V standard wiring diagram

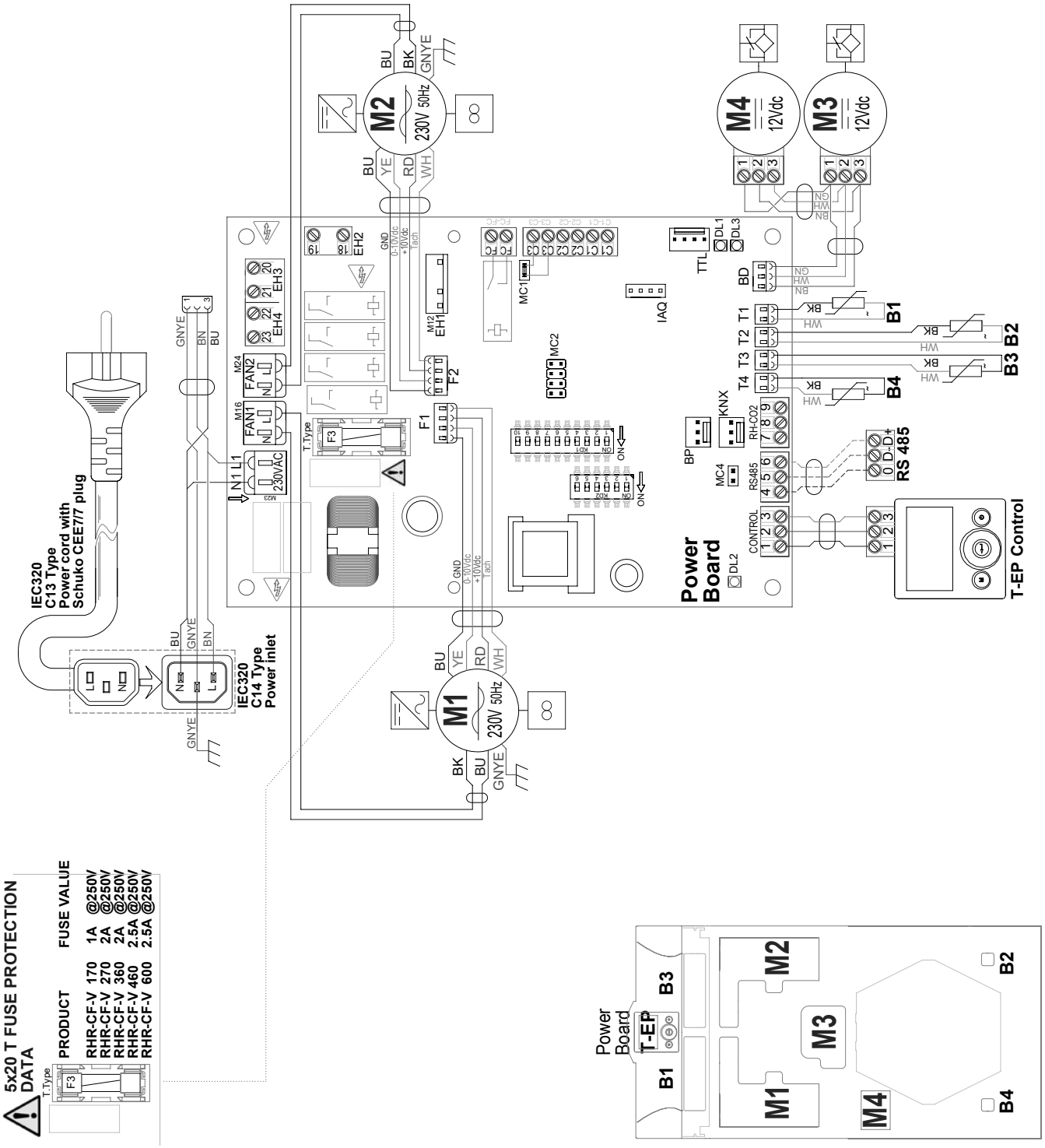

Installation instructions RHR-CF

21.2 SE-0547 - RHR-CF-V wiring diagram with preheating electric resistance

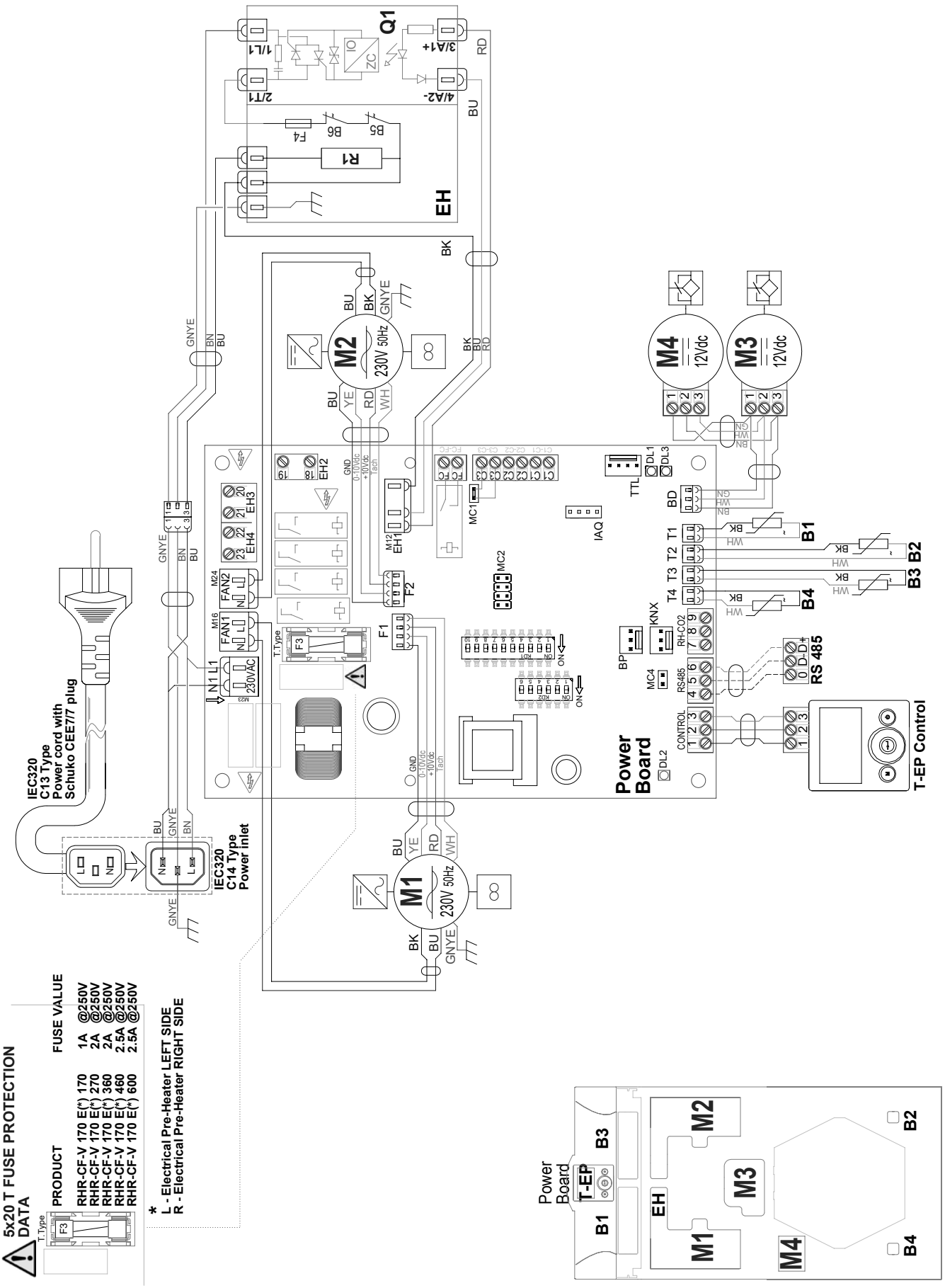

Installation instructions

21.3 SE-0546 - RHR-CF-V PRO wiring diagram

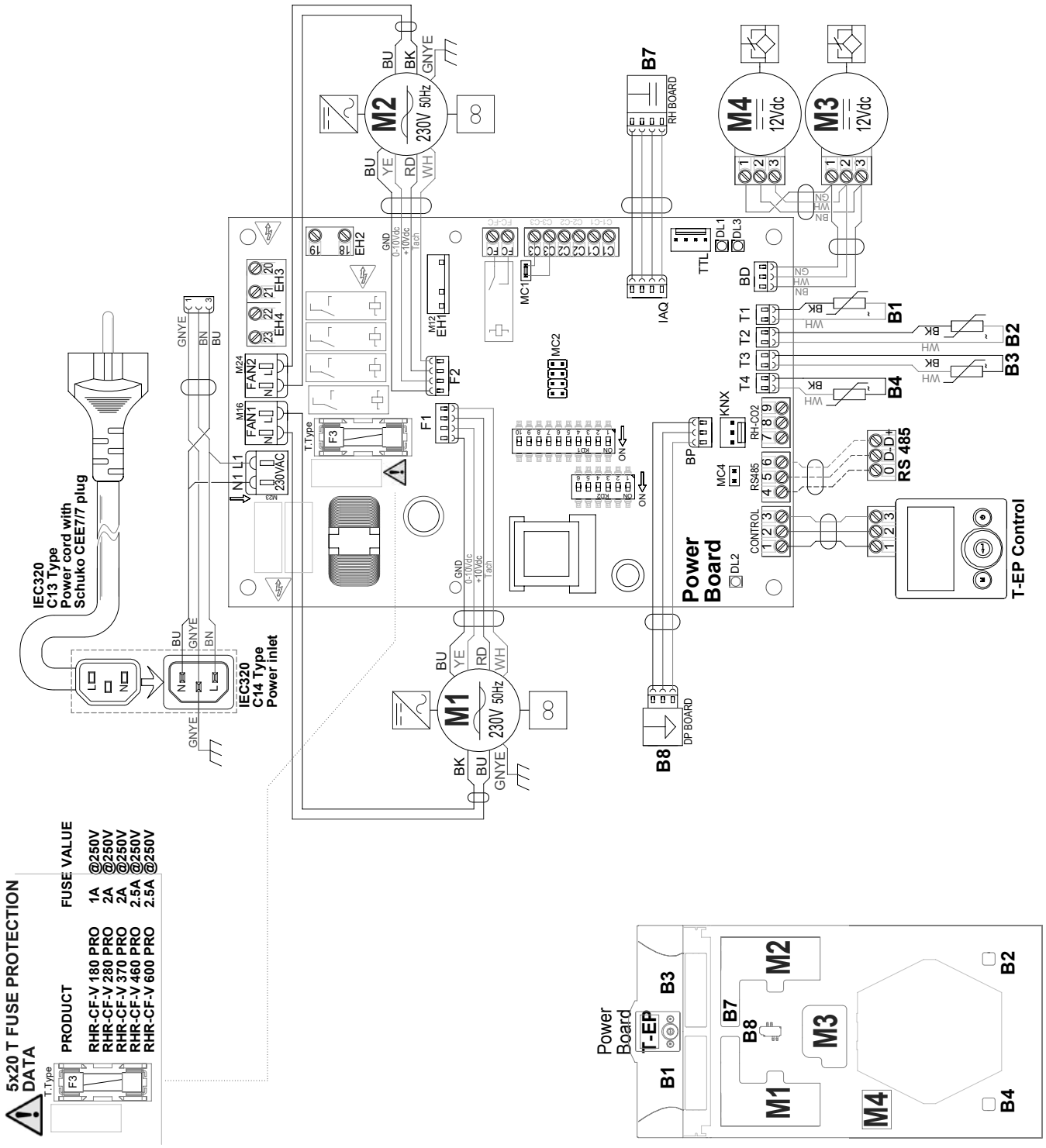

Installation instructions RHR-CF

21.4 SE-0548 - RHR-CF-V PRO wiring diagram with preheating electric resistance

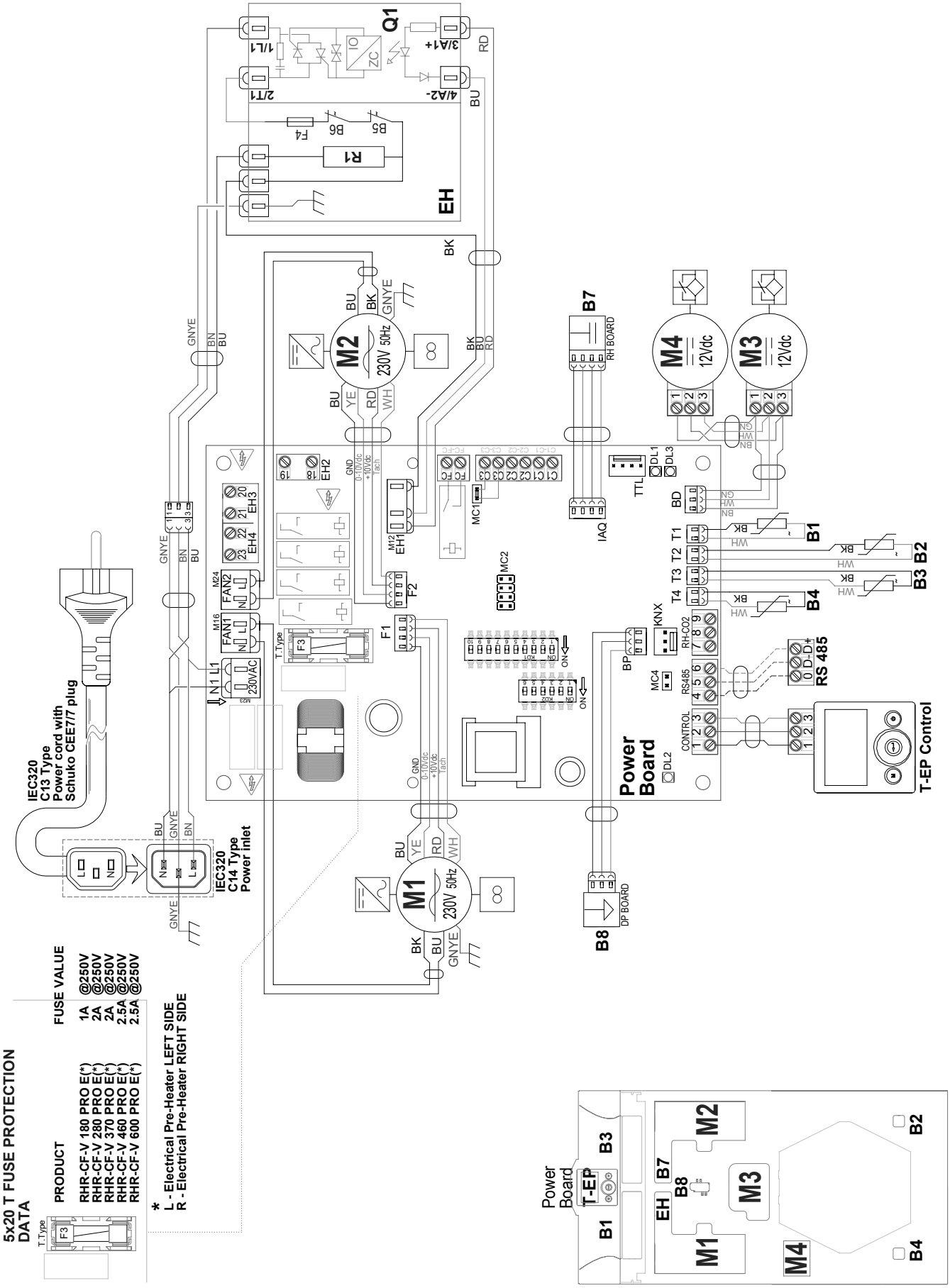

Installation instructions

21.5 Additional wiring diagrams

CARBON DIOXIDE (CO_2) REMOTE SENSOR Interface diagram

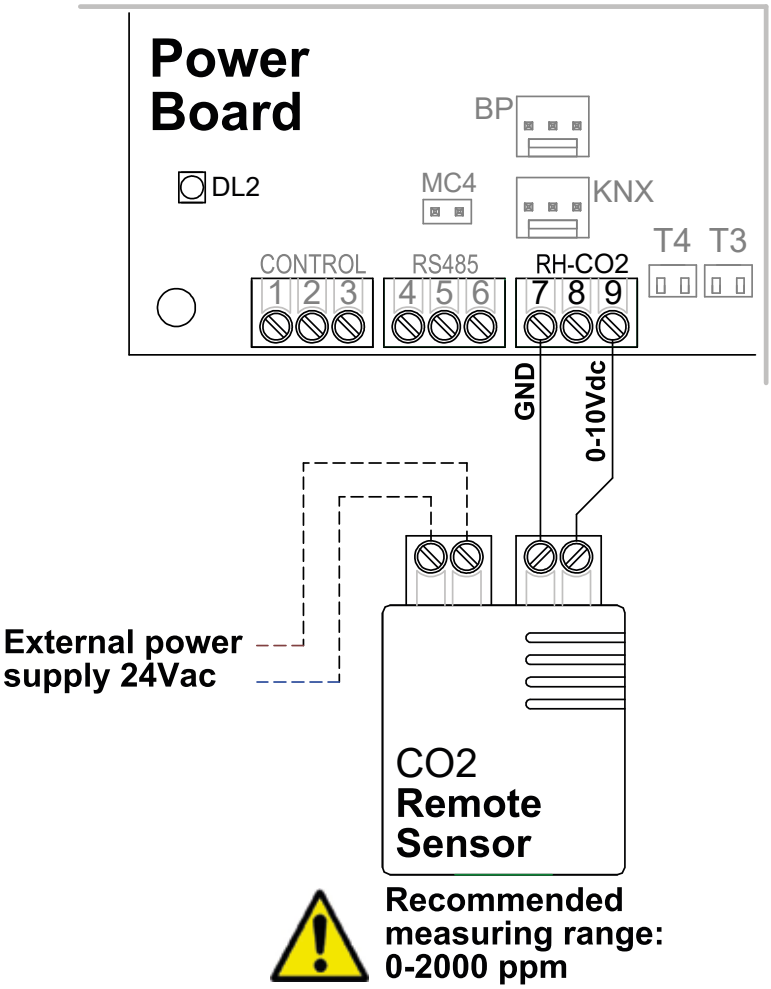

Most of us spend the majority of our time indoors. Indoor climate is crucial to how we feel, how productive we are and if we stay healthy.

We at Lindab have therefore made it our most important objective to contribute to an indoor climate that improves people's lives. We do this by developing energy-efficient ventilation solutions and durable building products. We also aim to contribute to a better climate for our planet by working in a way that is sustainable for both people and the environment.

Lindab | For a better climate

Lindab®
For a better climate

www.lindab.co.uk

2023-04-28